Quarter-Turn Electric Actuator

8280 035



- Option: (1)K = 11 (2)K
- With modulating card F
- No mechanical stops.

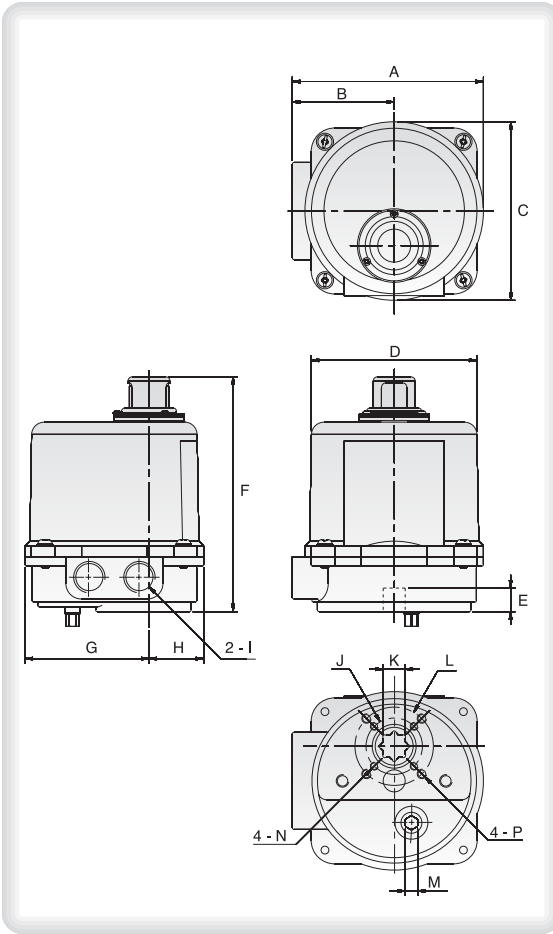

Model No.	Power (Watts)	Max Torque (Nm)	Speed (Sec/ 90˚)	Weight (kg)	Manual Override	Mounting Flange (ISO 5211)
8280 035	10W	35	12	2	Lever	F03/F05

Unit:mm

Dimension Model No.	A	B	C	D	E	F	G	H	I	J	K Max	L	M	N	P	Flange Type
8280 035	122	65	114	Ø106	15	150	79	35	1/2 PS	Ø36	14	Ø50	8	M5*0.8	M6*10	F03/F05

Quarter-Turn Electric Actuator

8280 050 / 8280 050L



- With modulating card E = 229.
- No mechanical stops.

Model No.	Power (Watts)	Max Torque (Nm)	Speed (Sec/ 90˚)	Weight (kg)	Manual Override	Mounting Flange (ISO 5211)
8280 050	10W	50	20	3	N/A	F05 or F07
8280 050L	10W	50	20	3	Lever	F05/F07

Unit:mm

Dimension Model No.	A	B	C	D	E	F	G	H	I	J	K	L	M	N	P	Q	Flange Type
8280 050	114	122	65	Ø106	196		Ø106	1/2 PS	17	57	57	Ø50	17	Ø70	M6*1.0	M8*1.25	F05 or F07
8280 050L	127	122	65	Ø106	196	5	Ø102	1/2 PS	17	70	57	Ø50	17	Ø70	M6*1.0	M8*1.25	F05 / F07

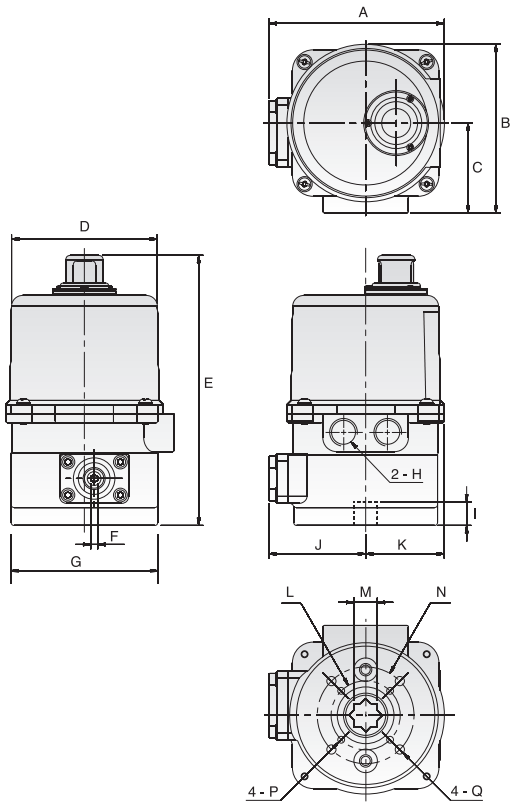

Quarter-Turn Electric Actuator

8280 090 & 8280 150



- With DC motor E=289.
  (apply to DC model or 75% duty cycle)
- Note: with torque switch A=361.

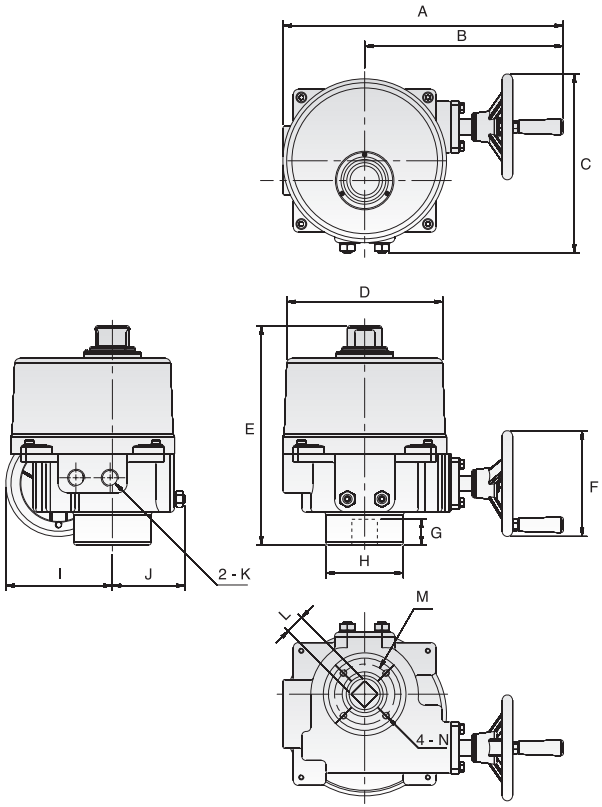

Model No.	Power (Watts)	Max Torque (Nm)	Speed (Sec/ 90˚)	Weight (kg)	Manual Override	Mounting Flange (ISO 5211)
8280 090	40W	90	15	11	Hand-wheel	F07
8280 150	40W	150	22	11	Hand-wheel	F07

Unit:mm

Dimension Model No.	A	B	C	D	E	F	G	H	I	J	K	L Max	M	N	Flange Type
8280 090/150	326	231	208	Ø181	255	Ø123	30	Ø90	124	84	1/2 PS	22	Ø70	M8*1.25	F07

Quarter-Turn Electric Actuator

8280 400 & 8280 500 & 8280 600



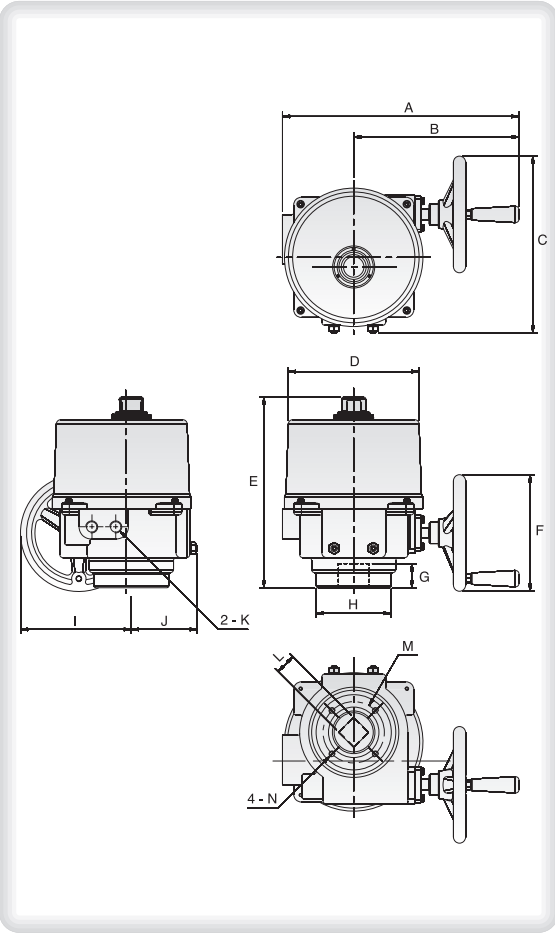

• Note : with torque switch A = 460.

Model No.	Power (Watts)	Max Torque (Nm)	Speed (Sec/ 90˚)	Weight (kg)	Manual Override	Mounting Flange (ISO 5211)
8280 400	120W	400	16	20	Hand-wheel	F10
8280 500	120W	500	22	20	Hand-wheel	F10
8280 600	120W	650	28	20	Hand-wheel	F10

Unit:mm

Dimension Model No.	A	B	C	D	E	F	G	H	I	J	K	L	M	N	Flange Type
8280 400/600	394	275	294	Ø217	317	Ø194	40	Ø125	184	110	1/2 PS	35	Ø102	M10*1.5	F10