Quarter-Turn Electric Actuator

8280 1000 & 8280 1500



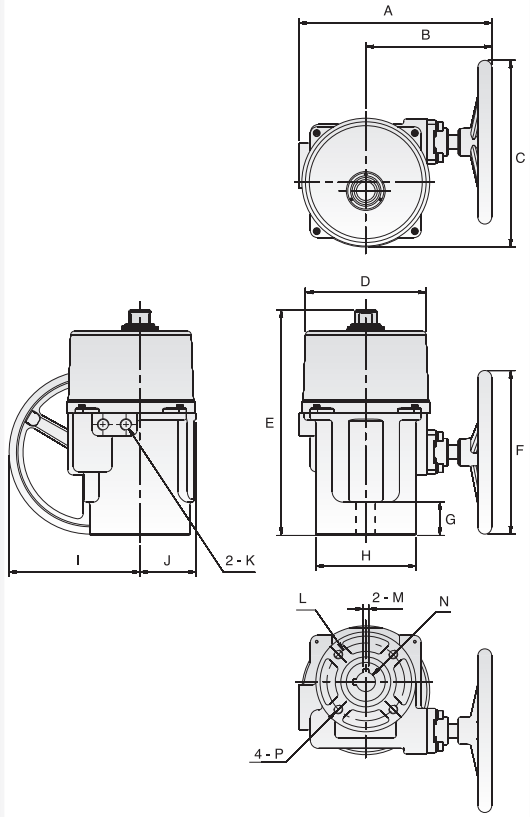

•Note : with torque switch A=435.

Model No.	Power (Watts)	Max Torque (Nm)	Speed (Sec/ 90˚)	Weight (kg)	Manual Override	Mounting Flange (ISO 5211)
8280 1000	180W	1000	46	32	Hand-wheel	F12 or F14
8280 1500	220W	1500	46	32	Hand-wheel	F12 or F14

Unit:mm

Dimension Model No.	A	B	C	D	E	F	G	H	I	J	K	L	M	N Max	P	Flange Type
8280 1000/1500	347	227	336	Ø217	406	Ø295	60	Ø180	235	101	1/2 PS	Ø125	10	Ø35	M12*1.75	F12
8280 1000/1500	347	227	336	Ø217	406	Ø295	60	Ø180	235	101	1/2 PS	Ø140	10	Ø35	M16*2.0	F14

Spring Return Actuator

S SERIES

FELLBACH



Print PDF

Model	Max Torque (Nm)	Weight (Kg)	Flange Size (ISO 5211)
S500	50	27	F07
S1300	130	57	F10
S2000	200	95	F12
S2600	260	95	F12

Unit:mm

Model	A	B	C	D	E	F	G	H	I	J	K	L	M	N	Flange Type
S500	258	360	400	30	4	ø55	ø90	ø178	1/2"NPT	171	87	17	ø70	M8 * 1.25	F07
S1300	365	462	478	39	5	ø70	ø125	ø262	1/2"NPT	247	118	22	ø102	M10 * 1.5	F10
S2000	438	600	548	45	5	ø85	ø150	ø304	1/2"NPT	305	133	27	ø125	M12 * 1.75	F12
S2600	438	600	548	45	5	ø85	ø150	ø304	1/2"NPT	305	133	27	ø125	M12 * 1.75	F12

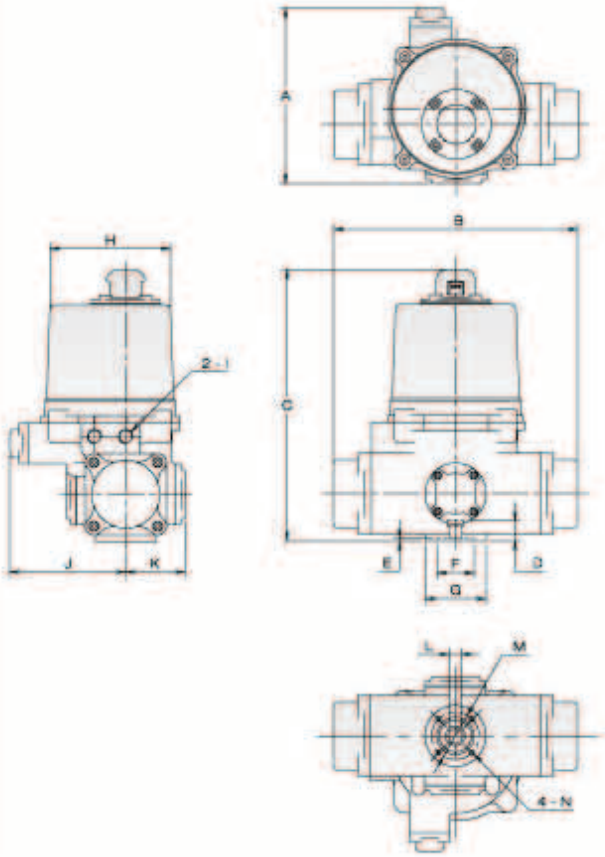

Notes

- Direction of rotation is based on viewing actuator from top.
- Drawing shows actuator output shaft in power fail clockwise position. (Standard unit fails clockwise. optional unit fails counter-clockwise.)

Spring Return Actuator

SH SERIES

FELLBACH®



Print PDF

Model	Max Torque (Nm)	Weight (Kg)	Flange Size (ISO 5211)
SH500	50	27	F07
SH1300	130	57	F10
SH2000	200	95	F12
SH2600	260	95	F12

Unit:mm

Model	A	B	C	D	E	F	G	H	I	J	K	L	M	N	P	Q	Flange Type
SH500	387	360	535	27	ø178	1/2"NPT	ø194	30	4	ø55	ø90	171	216	17	ø70	M8 * 1.25	F07
SH1300	483	462	643	58	ø262	1/2"NPT	ø296	39	5	ø70	ø125	247	236	22	ø102	M10 * 1.5	F10
SH2000	589	600	738	100	ø304	1/2"NPT	ø400	45	5	ø85	ø150	305	284	27	ø125	M12 * 1.75	F12
SH2600	589	600	738	100	ø304	1/2"NPT	ø400	45	5	ø85	ø150	305	284	27	ø125	M12 * 1.75	F12

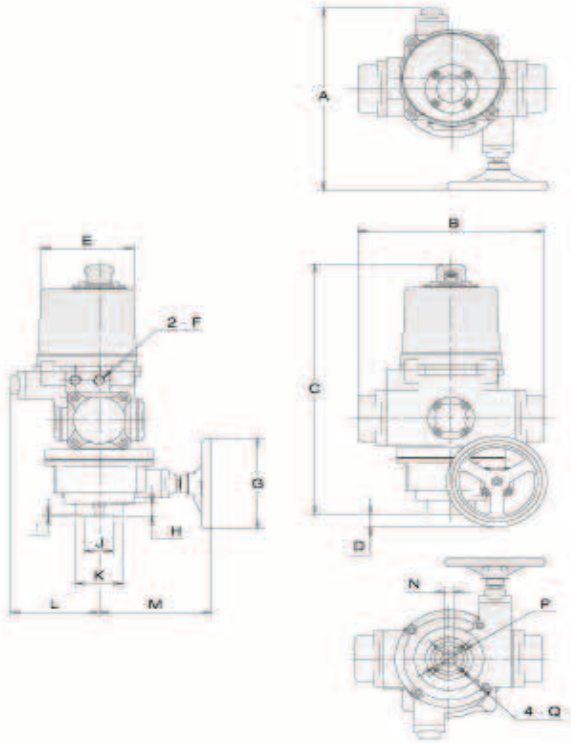

Notes

- Direction of rotation is based on viewing actuator from top.
- Drawing shows actuator output shaft in power fail clockwise position. (Standard unit fails clockwise. optional unit fails counter-clockwise.)

CAUTION

Manual Override

For the SH Series standard unit, after using the manual override for positioning, you must manually drive the actuator back to its fully closed position before the actuator will function again under power. This is a safety feature.

Electric Linear Valve Actuator

L SERIES



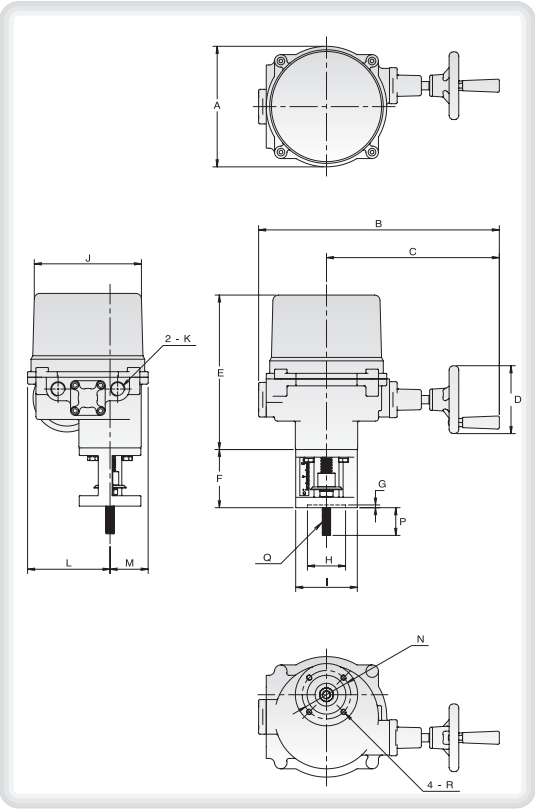

Model	Thrust(Kg)	Weight(Kg)	Motor Power	Mounting Flange ISO 5211
L250	250	8	15W	F07
L500	500	8	15W	F07
L1000	1000	22.5	25W	F10
L2000	2000	22.5	35W	F10

	F				
Model NO	20 trip	38 trip	50 trip	75 trip	100 trip
L250	84	84	96		
L500	84	84	96		
L1000		122	122	192	192
L2000		122	122	192	192

Model NO	A	B	C	D	E	G	H	I	J	K	L	M	N	P	Q	Flange Type
L250	174	349	250	ø98	223	4	ø55	ø90	ø155	1/2"NPT	119	55	ø70	M12*1.75	M8*1.25	F07
L500	174	349	250	ø98	223	4	ø55	ø90	ø155	1/2"NPT	119	55	ø70	M12*1.75	M8*1.25	F07
L1000	254	465	319	ø123	326	4	ø70	ø125	ø218	1/2"NPT	176	78	ø102	M20*2.5	M8*1.25	F10
L2000	254	465	319	ø123	326	4	ø70	ø125	ø218	1/2"NPT	176	78	ø102	M20*2.5	M8*1.25	F10

CAUTION

Instructions for hand-wheel:

After users press the hand wheel for OPEN and CLOSE, pull out it, they can operate the linear actuator by means of power.
If users don't pull out it, motor will still run, but the linear actuator won't operate.