B07 Series

Miniature Series 07
General Purpose Filter/Regulator
1/4” Port Size (As Standard)

- **Compact design**
- **Full flow gauge ports**
- **Low torque, non-rising adjusting knob**
- **Snap action knob locks pressure setting when pushed in**
- **Standard relieving models allow reduction of outlet pressure even when the system is dead-ended**
- **Protects air operated devices by removing liquid and solids contaminants**
- **Screw-on bowl reduces maintenance time**
- **Can be disassembled without the use of tools or removal from the air line**



Technical Data

Fluid: Compressed air
Maximum pressure:
Transparent bowl: 10 bar (150 psig)

Operating temperature:
Transparent bowl: -20° to +50°C (0° to +125°F)

Particle removal: 5 µm or 40 µm filter element
Air quality: Within ISO 8573-1, Class 3 and Class 5 (particulates)

Typical flow at 10 bar (100 psig) inlet pressure, 6,3 bar (90 psig) set pressure and a droop of 1 bar (15 psig) from set:
1/4" Ports: 6,5 dm³/s (14 scfm) with 5 µm element

Nominal bowl size: 31 ml (1 fluid ounce)

Gauge ports:
1/8” ISO Rc with ISO Rc main ports
Drain connection: 1/8" pipe
Automatic drain operation: Spitter type drain operates momentarily when a rapid change in air flow occurs or when the supply pressure is reduced.

Materials:

Body	: Zinc
Bonnet	: Acetal
Valve	: Brass/nitrile
Valve seat	: Acetal

Bowl:
Transparent: Polycarbonate
Element: Sintered polypropylene
Elastomers: Nitrile

Ordering Information
See *Ordering Information* on the following pages.

ISO Symbols

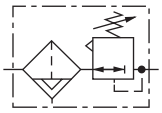

Automatic Drain
Relieving

Typical Performance Characteristics

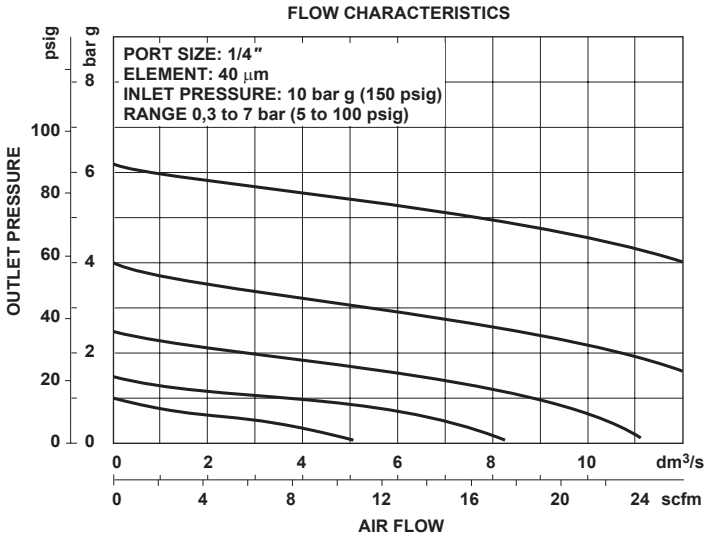

Ordering Information. Models listed include ISO G threads, transparent bowl, relieving diaphragm, automatic drain, 40 µm element, 0,3 to 7 bar (5 to 100 psig) outlet pressure adjustment range* .

Port Size	Model Number	Flow† dm³/s (scfm)	Weight kg
G1/4	**B07-201-A1KB**	6,5 dm³/s (14)	0,26

† Typical flow with 7 bar (100 psig) inlet pressure, 6,3 bar (90 psig) set pressure and a 1 bar (15 psig) droop from set.

Alternative Models

B 0 7 - ★ ★ ★ - ★ ★ ★ ★

Port Size	Substitute
1/4"	2

Bowl	Relief Type	Gauge	Substitute
Transparent	Relieving	Without	01
Transparent	Non relieving	Without	03

Threads	Substitute
PTF	A
ISO Rc taper	B
ISO G parallel	G

Outlet Pressure Adjustment Ranges	Substitute
0.3 to 7 bar (5 to 100 psig)	K
0.3 to 10 bar (5 to 145 psig)	M

Element	Substitute
5 µm	1
40 µm	3

Drain	Substitute
Automatic	A
Manual	M

Accessories

 Wall Mounting Bracket and Panel Nut for P1H Unit	 Panel Nut	 Tamper Resistant Field Modification	Ø 40 mm Pressure Gauge	 R1/8 Connection
Plastic: 18-025-003	Plastic: 2962-89	Knob and screw: 18-001-092	4 bar (60 psig):	18-013-990
			10 bar (150 psig):	18-013-989

Dimensions mm

Panel mounting hole diameter 30 mm
Panel thickness 0 to 6 mm

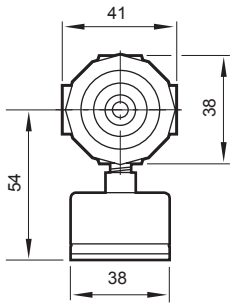

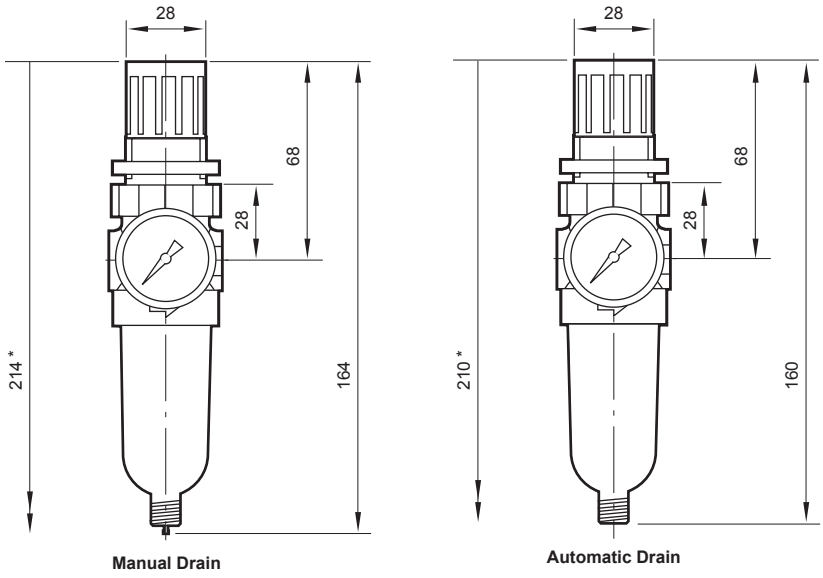

* Minimum clearance to remove bowl

Bracket Mounting

Use 3 mm (1/8″) screws to mount bracket to wall.

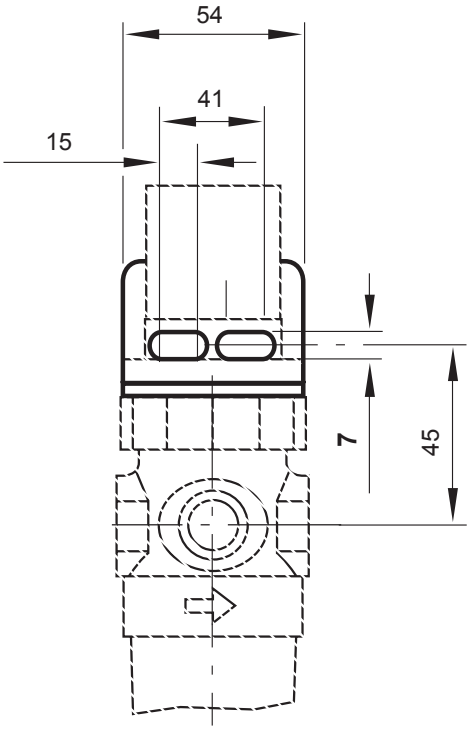

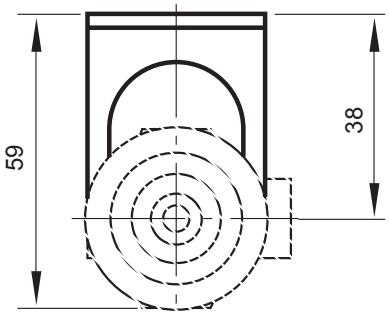

Bracket Kit Reference

Item	Part Number
All models	18-025-003