FELLBACH®



Lug Knife Gate Valve

Model: GKA073

Products Range:

Pressure Rate : PN10
Size : DN50 - DN1000
Body Material : Ductile iron, carbon steel, stainless steel, duplex stainless steel
Operated Type : Handwheel

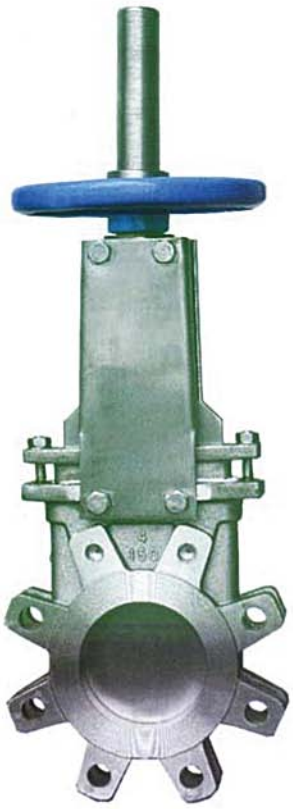

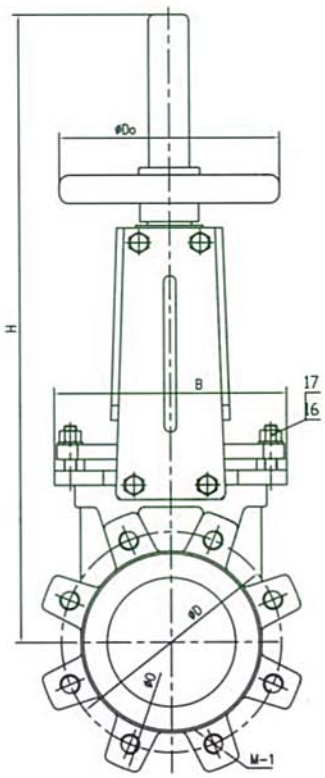

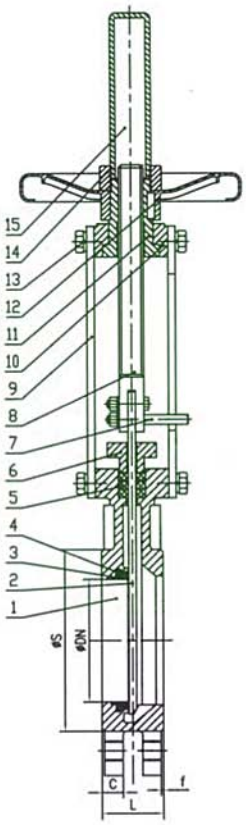

Main dimensions

DN	L	O	D	S	C	f	M-(UNC)	B	H	Do
50	48	152	120.5	95	16		4-M5/8"-11	136	375	180
65	48	178	139.5	110	16		4-M5/8"-11	151	420	180
80	51	190	152.5	127	17		4-M5/8"-11	170	450	200
100	51	229	190.5	148	17		8-M5/8"-11	190	512	200
125	57	254	216	174	17		8-M3/4"-10	212	570	220
150	57	280	241.5	199	21	1.6	8-M3/4"-10	230	665	250
200	70	343	298.5	250	21		8-M3/4"-10	286	825	300
250	70	406	362	308	24		12-M7/8"-9	338	1000	350
300	76	483	432	360	24		12-M7/8"-9	388	1155	350
350	76	533	476	416	33		12-M1"-8	460	1310	400
400	89	597	540	466	35		16-M1"-8	520	1475	500