FELLBACH®



Lug Knife Gate Valve (Pneumatic)

Model: GKA673

Products Range:

Pressure Rate : PN10
Size : DN50 - DN600
Body Material : Ductile iron, carbon steel, stainless steel, duplex stainless steel
Operated Type : Pneumatic actuator



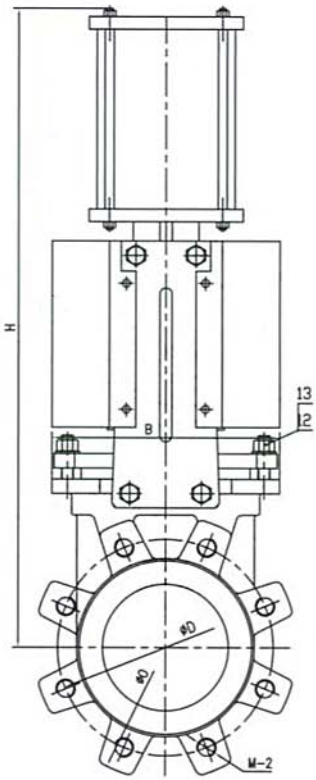

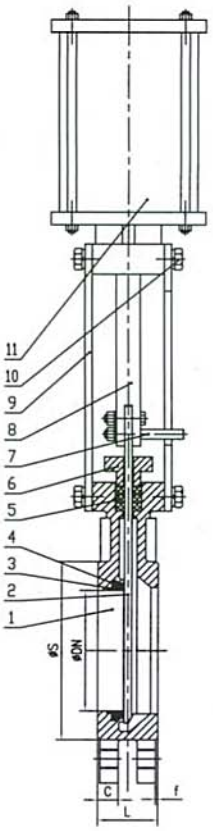

Main dimensions

DN	L	O	D	S	C	f	M-(UNC)	B	H
50	48	152	120.5	95	16	1.6	4-M5/8"-11	136	430
65	48	178	139.5	110	16		4-M5/8"-11	151	460
80	51	190	152.5	127	17		4-M5/8"-11	170	510
100	51	229	190.5	148	17		8-M5/8"-11	190	570
125	57	254	216	174	17		8-M3/4"-10	212	660
150	57	280	241.5	199	21		8-M3/4"-10	230	720
200	70	343	298.5	250	21		8-M3/4"-10	286	890
250	70	406	362	308	24		12-M7/8"-9	338	1120
300	76	483	432	360	24		12-M7/8"-9	388	1230
350	76	533	476	416	33		12-M1"-8	460	1370
400	89	597	540	466	35		16-M1"-8	520	1570
450	89	635	578	525	36		16-M1"1/8-7	585	1720
500	114	700	635	584	37		20-M1"1/8-7	635	1850
600	114	813	749.5	664	37		20-M1"1/4-7	720	2150