# L07 Series

**Miniature L07 Series**
**Micro-Fog Lubricator**
**1/4” Port Size (As Standard)**

- **Compact design**
- **Provides air line lubrication to one or more air driven tools or other devices**
- **Nearly constant oil density output with varying air flow**
- **All around (360°) visibility of the sight-feed dome simplifies installation and adjustment**
- **Screw-on bowl reduces maintenance time**
- **Can be disassembled without the use of tools or removal from the air line**




## Technical Data

Fluid: Compressed air

Maximum pressure:
Transparent bowl: 10 bar (150 psig)

Operating temperature:
Transparent bowl: -20° to +50°C (0° to +125°F)

Start point (i.e., minimum flow required for lubricator operation):
0,24 $dm^3/s$ (0.5 scfm) at 6,3 bar (90 psig) inlet pressure

Typical flow at 6,3 bar (90 psig) inlet pressure at 0,3 bar (5 psig) pressure drop:
1/4” ports: 6,7 $dm^3/s$ (14 scfm)

Nominal bowl size: 31 ml (1 fluid ounce)

Materials:
Body: Zinc
Bowl:
Transparent: Polycarbonate
Sight-feed dome: Transparent nylon
Elastomers: Neoprene & nitrile

## Ordering Information

See *Ordering Information* on the following pages.

## ISO Symbols

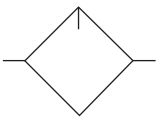

Without drain

## Typical Performance Characteristics

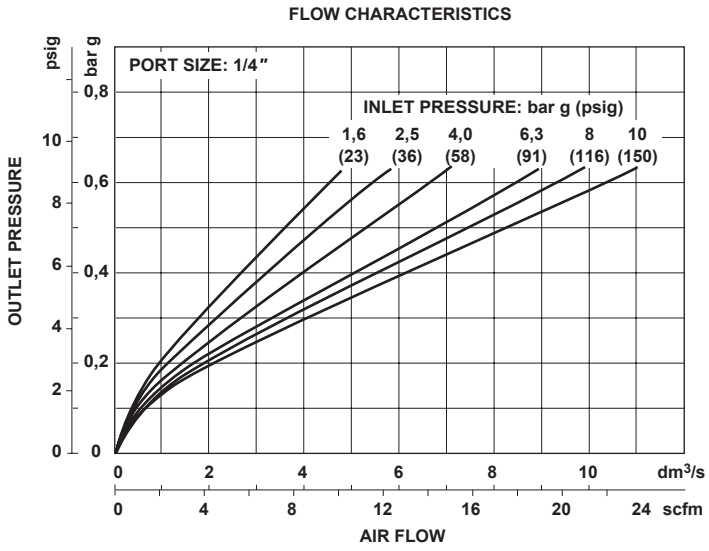


**Ordering Information.** Models listed include ISO G threads and transparent bowl without drain.

| Port Size | Model Numbers | Flow dm³/s (scfm) * | Weight kg |
|---|---|---|---|
| G 1/4 | **L07-200-MPQG** | 6,7 dm³/s (14) | 0.13 |

* Approximate flow at 6.3 bar (90 psig) inlet pressure and 0.5 bar (7 psig) pressure drop.

L 0 7 - ★ ★ ★ - ★ ★ ★ ★

| Port Size | Substitute |
|---|---|
| 1/4" | 2 |

| Option | Substitute |
|---|---|
| Not applicable | 0 |

| Option | Substitute |
|---|---|
| Not applicable | 0 |

| Threads | Substitute |
|---|---|
| ISO G parallel | G |

| Bowl and Drain | Substitute |
|---|---|
| Transparent without drain | Q |

| Flow | Substitute |
|---|---|
| Unidirection | P |

| Lubricator Type | Substitute |
|---|---|
| Micro-Fog | M |

## Accessories

| 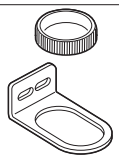 Wall Mounting Bracket and Plastic Panel Nut |  Panel Nut |  Tamper Resistant Snap-on Cap for Standard Sight-Feed Dome |
|---|---|---|
| 18-025-003 | Plastic: 2962-89 | 4050-89 |

## Dimensions mm

Panel mounting hole diameter 30 mm
Maximum panel thickness 0 to 6 mm

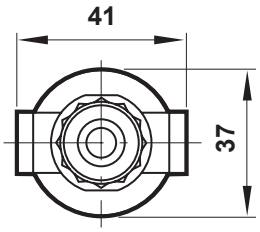


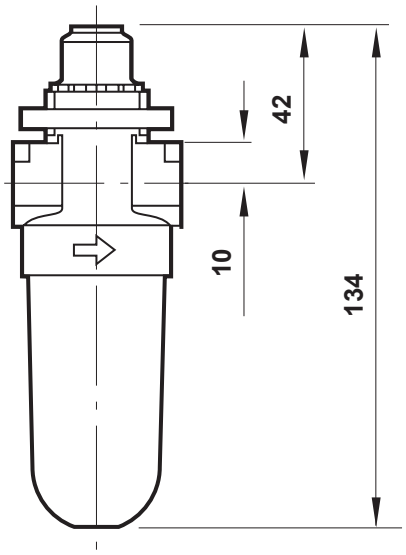


**Without Drain**

## Bracket Mounting

Use 1/8″ (3 mm) screws to mount bracket to wall.

## Bracket Kit Reference

| Item | Part Number |
|---|---|
| All models | 18-025-003 |

