R07 Series

Miniature Series 07
General Purpose Regulator
1/4” Port Sizes (As Standard)

- **Compact design**
- **Full flow gauge ports**
- **Low torque, non-rising adjusting knob**
- **Snap action knob locks pressure setting when pushed in**
- **Standard relieving models allow reduction of outlet pressure even when the system is dead-ended**
- **Can be disassembled without the use of tools or removal from the air line**



Technical Data

Fluid: Compressed air
Maximum pressure: 20 bar (300 psig)
Operating temperature: -20° to +65°C (0° to +150°F)

Typical flow at 10 bar (150 psig) inlet pressure, 6,3 bar (90 psig) set pressure and a droop of 1 bar (15 psig) from set:
1/4" ports: 7 dm³/s (15 scfm)

Gauge ports:
1/8" ISO Rc with ISO G main ports

Materials:

Body	: Zinc
Bonnet	: Acetal
Valve	: Brass/nitrile
Valve seat	: Acetal
Elastomers	: Nitrile

Ordering Information

See *Ordering Information* on the following pages.

ISO Symbols



Relieving | Non relieving

Typical Performance Characteristics

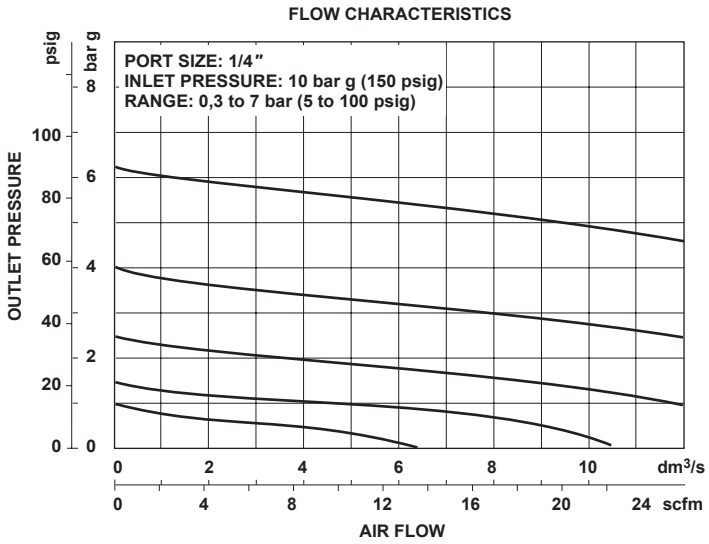

Ordering Information. Models listed include ISO G threads, relieving diaphragm, 0,3 to 7 bar (5 to 100 psig) outlet pressure adjustment range* without gauge.

Port Size	Model Number	Flow† dm³/s (scfm)	Weight kg (lbs)
G1/4	**R07-200-RNKG**	7 (15)	0,19 (0.31)

† Approximate flow at 7 bar (100 psig) inlet pressure, 6.3 bar (90 psig) set pressure and a droop of 1 bar (14.5 psig) from set.

R 0 7 - ★ ★ ★ - ★ ★ ★ ★

Port Size	Substitute
1/4"	2

Option	Substitute
Not applicable	0

Option	Substitute
Standard	0

Threads	Substitute
ISO G parallel	G

Outlet Pressure Adjustment Ranges*	Substitute
0,3 to 7 bar (5 to 100 psig)	K

Gauges	Substitute
With	G
Without	N

Diaphragm	Substitute
Relieving	R
Non relieving	N

* Outlet pressure can be adjusted to pressures in excess of, and less than, those specified. Do not use these units to control pressures outside of the specified ranges.

Accessories

Wall Mounting Bracket and Panel Nut for P1H Unit	Panel Nut	Tamper Resistant Field Modification	Ø 40 mm Pressure Gauge	R1/8 Connection
Plastic: 18-025-003	Plastic: 2962-89	Knob and screw: 18-001-092	4 bar (60 psig):	18-013-990
			10 bar (150 psig):	18-013-989

Dimensions mm

Panel mounting hole diameter 30 mm
Maximum panel thickness 0 to 6 mm

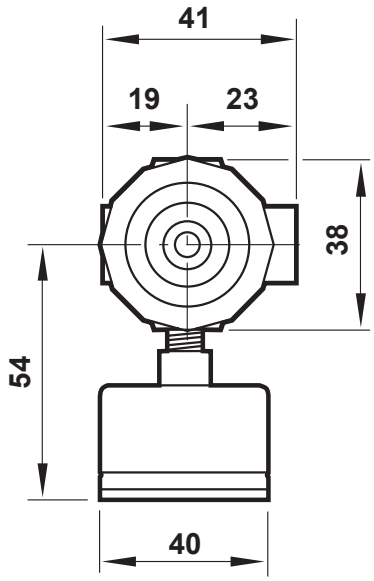

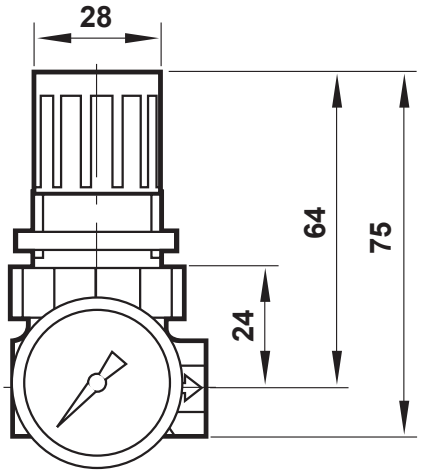

Bracket Mounting

Use 3 mm (1/8″) screws to mount bracket to wall.

Bracket Kit Reference

Item	Part Number
All models	18-025-003

