FELLBACH®



VALVE TECHNOLOGY SYSTEMS
www.wogscontrol.com

Wafer Knife Gate Valves

FELLBACH®

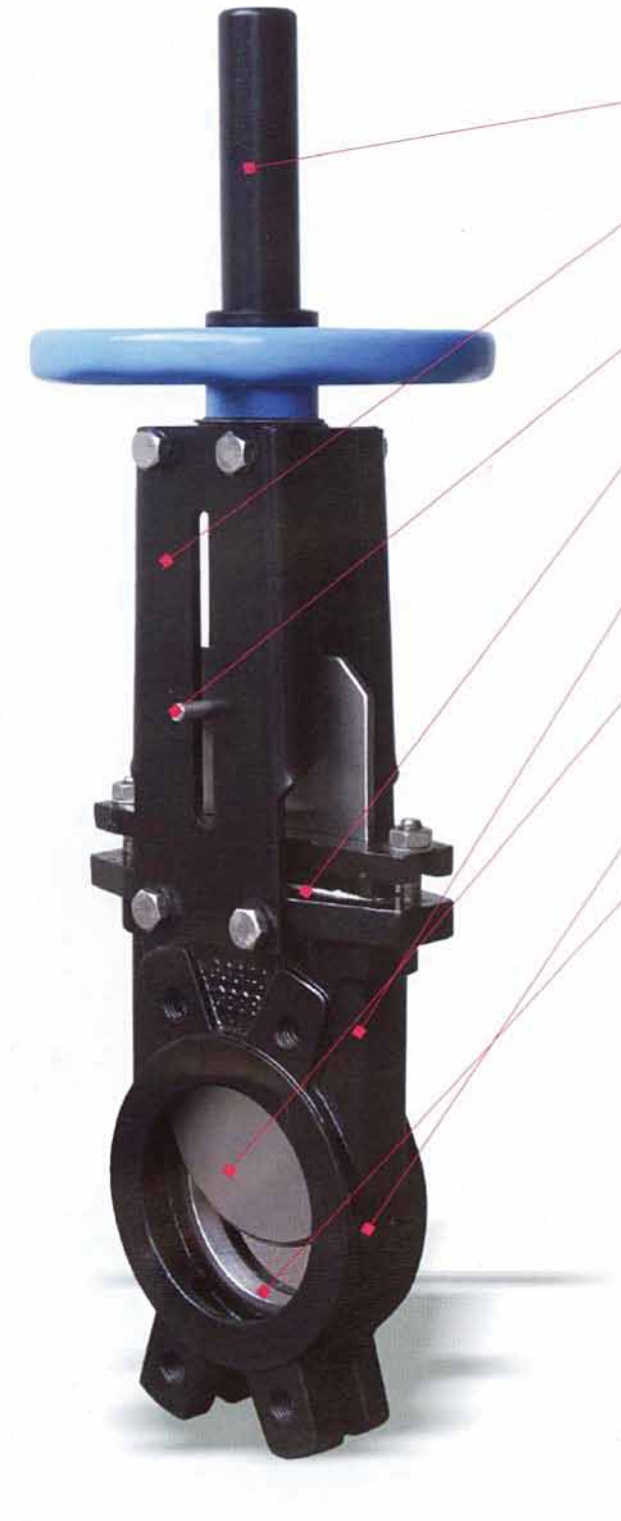

- **Protector tube**
- **Support plate (Machine pressed +epoxy coated)**
- **Position indicator**
- **Packing (PTFE+silicone)**
- **One piece body (Oven baked)**
- **Knife (Superior machined+polished)**
- **Flow arrow**
- **Renewable seat**

Main parts and materials

NO.	Part Name	Ductile Iron	CF8M
1	Body	GGG40	ASTM A351 CF8M
2	Gate	X5CrNi189	SS316
3	Retainer ring	X5CrNi189	SS316
4	Sealing ring	EPDM or metal	SS316 or Viton
5	Packing	PTFE+Silicone	PTFE+Silicone
6	Packing gland	GGG40	ASTM A351 CF8M
7	Position indicator	X5CrNi189	SS316
8	Stem	X20Cr13	ASTM A276 316
9	Stem nut	G-CuSn72nPb	ASTM B148 C95200
10	Suppport plate	St33	SS304

Wafer Knife Gate Valves

Model: GLK073

Products Range:

Pressure Rate : PN10
Size : DN50 - DN400
Body Material : Ductile iron, stainless steel, duplex stainless steel
Operated Type : Handwheel op.



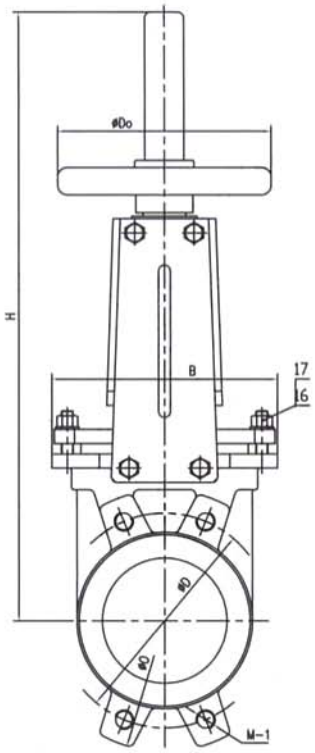

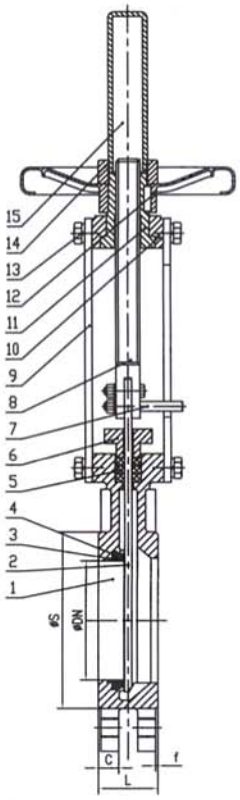

Main dimensions

DN	L	O	D	S	C	f	M-1	B	H	Do	Weight (KGS)
50	40	165	125	95	16	2	4-M16	136	375	180	7
65	40	185	145	110	16	2	4-M16	151	420	180	8
80	50	200	160	127	17	2	8-M16	170	450	200	11
100	50	220	180	148	17	2	8-M16	190	512	200	12
125	50	250	210	174	17	2	8-M16	212	570	220	15
150	60	285	240	199	21	2	8-M20	230	665	250	21
200	60	340	295	250	21	2	8-M20	286	825	300	29
250	70	395	350	308	24	2	12-M20	338	1000	350	46
300	70	445	400	360	24	2	12-M20	388	1155	350	66
350	96	505	460	416	33	2	16-M20	460	1310	400	92
400	100	565	515	466	35	2	16-M24	520	1475	500	125