FELLBACH®



Knife Gate Valves (Non Rising Stem)

Model: GKN073

Products Range:

Pressure Rate : PN10
Size : DN50 - DN400
Body Material : Ductile iron, stainless steel, duplex stainless steel
Operated Type : Handwheel op.

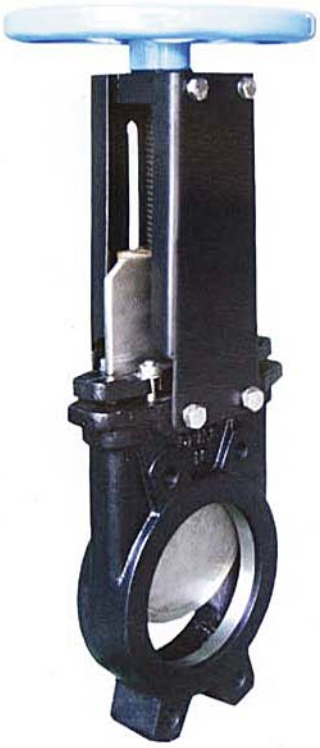

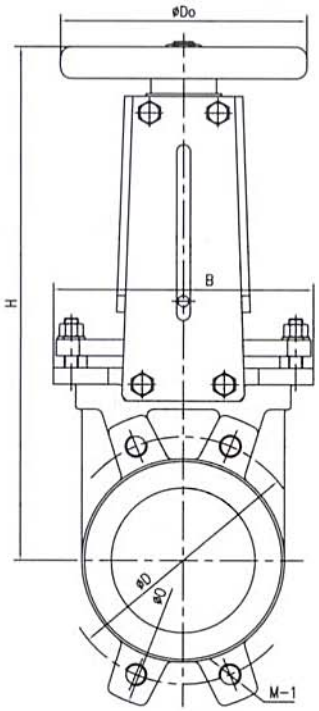

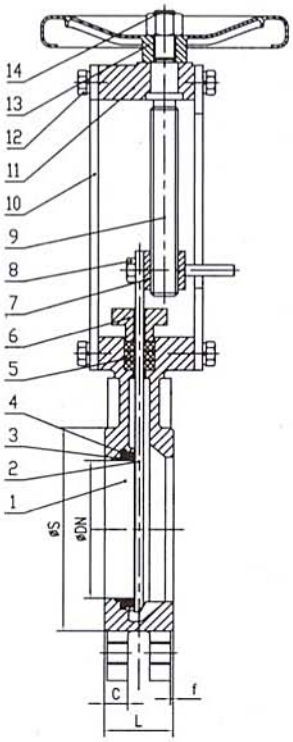

Main dimensions

DN	L	O	D	S	C	f	M-1	B	H	Do	Weight (KGS)
50	40	165	125	95	16	2	4-M16	136	295	180	7
60	40	185	145	110	16	2	4-M16	151	320	180	8
80	50	200	160	127	17	2	8-M16	170	340	200	10
100	50	220	180	148	17	2	8-M16	190	380	200	12
125	50	250	210	174	17	2	8-M16	212	410	220	15
150	60	285	240	199	21	2	8-M20	230	476	250	21
200	60	340	295	250	21	2	8-M20	286	580	300	30
250	70	395	350	308	24	2	12-M20	338	700	350	45
300	70	445	400	360	24	2	12-M20	388	910	350	61
350	96	505	460	416	33	2	16-M20	460	915	400	90
400	100	565	515	466	35	2	16-M24	520	1050	500	126