GOLDEN TURBINE VIBRATOR



How It Works

An aluminum wheel with brass weights punched in develops the eccentric force.

It spins on a shaft connected to the endplate and supported by two bearings.

Features

Noise level never exceeds **75 dba**.

Bearings come pregreased, **no lubrication** is required.

Bearings are **oversized** to dramatically increase vibrators' life.

Can be used at **temperatures** of up to **230°F** *(280°F for the GT4 & GT6)*

GT "S" models use unbalance weights of heavy metal *(instead of the standard brass)* that produces a **slower frequency** and a **higher amplitude**.

Design

The vibration is produced by the centrifugal force of the positive and negative unbalanced moments in the rotor.

The rotor is supported on two heavy duty, prelubricated, matched shielded ball bearings. A special long life grease ensures a long working life.

The inner and outer raceways of the bearings are designed so that the bearings can be easily replaced using only a pin-wrench.

The endplates are fitted with right- and left-hand threads and are self-locking.

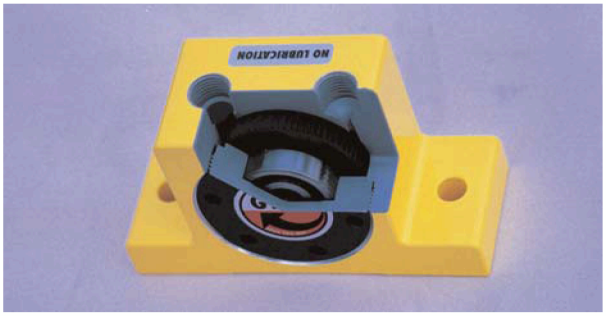

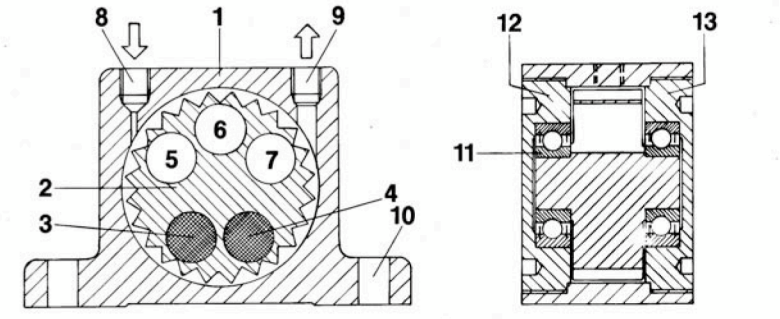

1. Extruded aluminum body
2. Hardened aluminum rotor.
3-4. Brass weights.
5-6-7. Cavities giving negative moment.
10. Standard bolt holes.
11. Self lubricated bearings.
8. BSP tapped air inlet.
9. BSP tapped air exhaust.
12-13. Hard coated aluminum endplates

Benefits

17 sizes with force output ranging between 25 and1600 lbs.

No metal-to-metal contact reduces noise and wear.

Because vibrator life is determined primarily by the bearing life, regular replacement of the bearings can extend vibrator life indefinitely.

Aluminum body construction and absence of airline lubrication allows use in many special environment such as food, chemical and pharmaceutical industries.

Develops little or no heat and can operate under adverse conditions of grit, water, rust, heat and cold.

Will not rust in extremely humid conditions.



GT Vibrators produce a sinusoidal vibration that brings material much better into resonance than linear vibrators.
Frequency can be adjusted by using a pressure or a flow regulator.

Turbine Vibrators are used to separate or compact materials.
One common application is to empty bins, silos and hoppers.
Although the result is feeding material, the job of the vibrator is first to separate a clogged product in order to free it.
Once it is freed, it will move just by gravity.

Technical characteristics

Type	Frequency rpm			Force N			Air consumption l / min			Noise level
	2 bar	4 bar	6 bar	2 bar	4 bar	6 bar	2 bar	4 bar	6 bar	dBA
GT-4	14000	15000	15000	135	180	200	33	58	83	60-70
GT-6	11500	12000	12500	130	175	210	33	58	83	60-70
GT-8	36000	42000	46000	990	2060	2910	46	80	112	60-70
GT-10	27500	35000	37500	840	1390	2400	46	80	112	60-70
GT-10-S	17000	23000	25000	650	1350	1950	46	80	112	60-70
GT-13	26000	30000	33000	1400	2440	3730	120	200	290	60-70
GT-16	17000	21500	24000	1220	2090	3160	120	200	290	60-70
GT-16-S	11500	15500	17000	1100	1900	2700	120	200	290	60-70
GT-20	17000	20000	23000	2170	4040	5520	185	325	455	60-70
GT-25	12000	15500	17000	2120	3510	5070	185	325	455	60-70
GT-25-S	8500	11000	13000	2250	3600	4900	185	325	455	60-70
GT-30	13000	14000	16000	3380	5430	7540	330	530	745	60-70
GT-36	8000	10000	13000	3290	5360	7190	330	530	745	60-70
GT-36-S	6100	7200	8300	4100	6200	7500	330	530	745	60-70
GT-40	7700	8800	9500	4300	7300	9800	425	700	970	60-70
GT-48	6000	7500	9700	4900	7700	10500	425	700	970	60-70
GT-48-S	0	5600	6300	0	7500	12000	425	700	970	60-70

Dimensions and weights

Type	A	B	C	D	E	F	G	H	kg
GT-4	40.0	28.0	70.0	56.0	10.5	6.0	G 1/8"	G 1/8"	0.165
GT-6	40.0	28.0	70.0	56.0	10.5	6.0	G 1/8"	G 1/8"	0.140
GT-8	50.0	33.0	86.0	68.0	12.0	7.0	G 1/8"	G 1/8"	0.250
GT-10	50.0	33.0	86.0	68.0	12.0	7.0	G 1/8"	G 1/8"	0.255
GT-10-S	50.0	33.0	86.0	68.0	12.0	7.0	G 1/8"	G 1/8"	0.263
GT-13	65.0	42.0	113.0	90.0	16.0	9.0	G ¼"	G ¼"	0.565
GT-16	65.0	42.0	113.0	90.0	16.0	9.0	G ¼"	G ¼"	0.580
GT-16-S	65.0	42.0	113.0	90.0	16.0	9.0	G ¼"	G ¼"	0.614
GT-20	80.0	56.0	128.0	104.0	16.0	9.0	G ¼"	G ¼"	1.090
GT-25	80.0	56.0	128.0	104.0	16.0	9.0	G ¼"	G ¼"	1.120
GT-25-S	80.0	56.0	128.0	104.0	16.0	9.0	G ¼"	G ¼"	1.200
GT-30	100.0	73.0	160.0	130.0	20.0	11.0	G 3/8"	G 3/8"	2.200
GT-36	100.0	73.0	160.0	130.0	20.0	11.0	G 3/8"	G 3/8"	2.300
GT-36-S	100.0	73.0	160.0	130.0	20.0	11.0	G 3/8"	G 3/8"	2.530
GT-40	120.0	83.0	194.0	152.0	24.0	17.0	G 3/8"	G 3/8"	3.690
GT-48	120.0	83.0	194.0	152.0	24.0	17.0	G 3/8"	G 3/8"	3.890
GT-48-S	120.0	83.0	194.0	152.0	24.0	17.0	G 3/8"	G 3/8"	4.290

