JDV CONTROL VALVES

JBF Series

Floating Type Soft Seat Ball Valve



JDV CONTROL VALVES

JBF Series

Floating Type Soft Seat Ball Valve

Full Bore Two-Piece Flanged Ends

JIS 10/20/40K ANSI 150/300/600LB DIN PN10/16/25/40



JBF series is the quarter turn design ball valve broadly used in Oil & Gas, Mining, Petrochemical, Chemical Industries, Power Generation...etc. applications. Optional Fire Safe, Long Stem, and Life Loading designs provide safer and wider usage for different requirements.

Applicable Standards

- Body material：Standard in WCB, CF8, CF8M
  Special material is available according to requirements.
- Nominal size：1/2" to 12"(DN15 to DN300)
- Pressure rating：JIS 10/20/40K ANSI 150/300/600LB DIN PN 10/16/25/40
- End connections：Raised face flange
- Temperature range：- 50 Deg C ~ 180 Deg C
- Face-To-Face Dimensions：JIS B2003 ANSI B16.10 DIN 3202 F4/F5
- Flanged Dimensions：JIS B2238 ANSI B16.5 DIN 2632/2633/2634/2365
- Body Pressure Test Rating：JIS B2003 ANSI B16.34 API 598
- Seat Leakage：JIS B2003 ANSI B16.34 API 598 CLASS VI
- Casting：MSS-SP-25 MSS-SP-55
- NACE MR-01-75



Options:

1. Fire-Safe Design Conforms To API 607 4th
2. Long Stem
3. Life Loading
4. Gear Device / Actuator Device





API 607 4th

Design & Structures

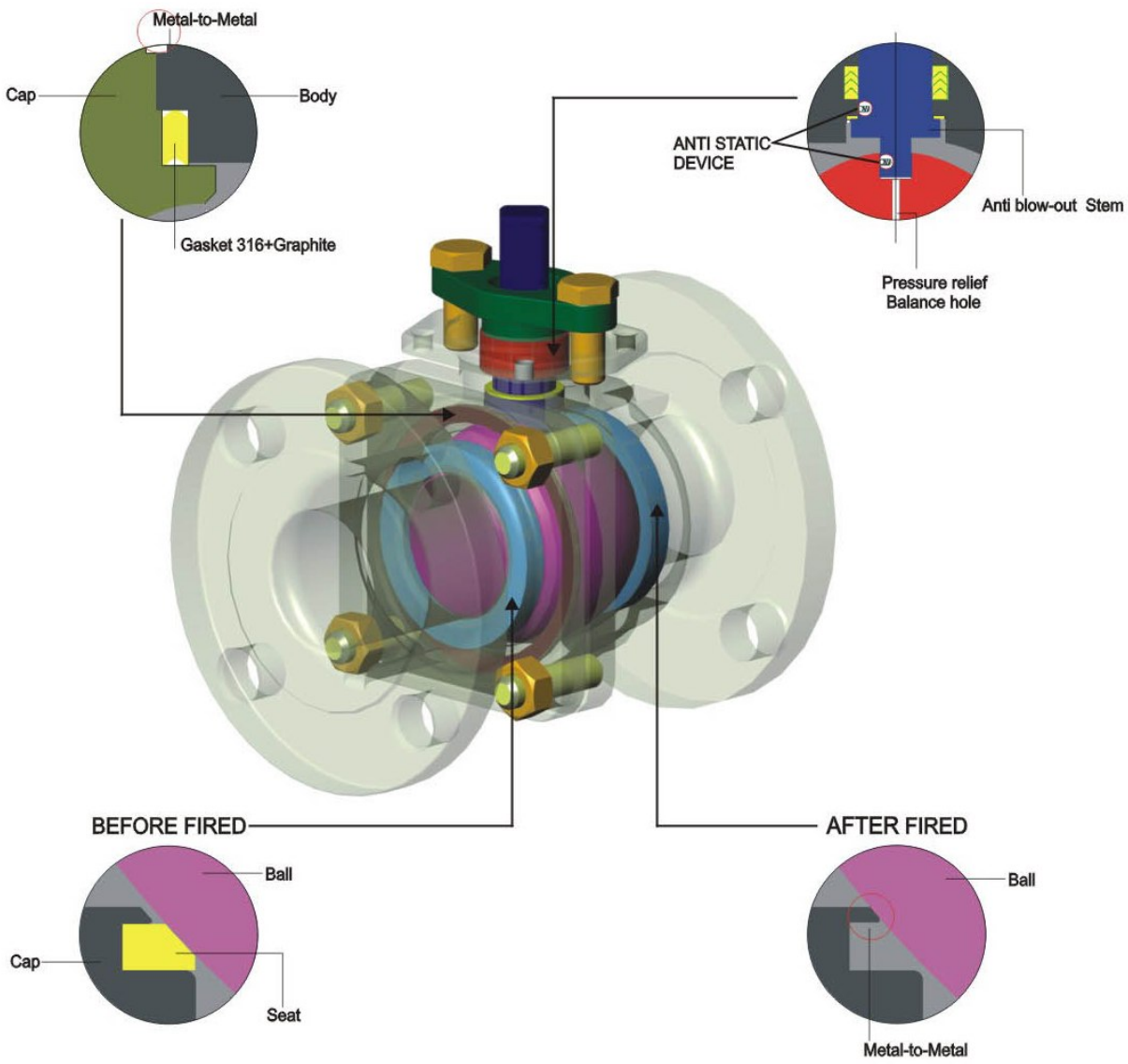

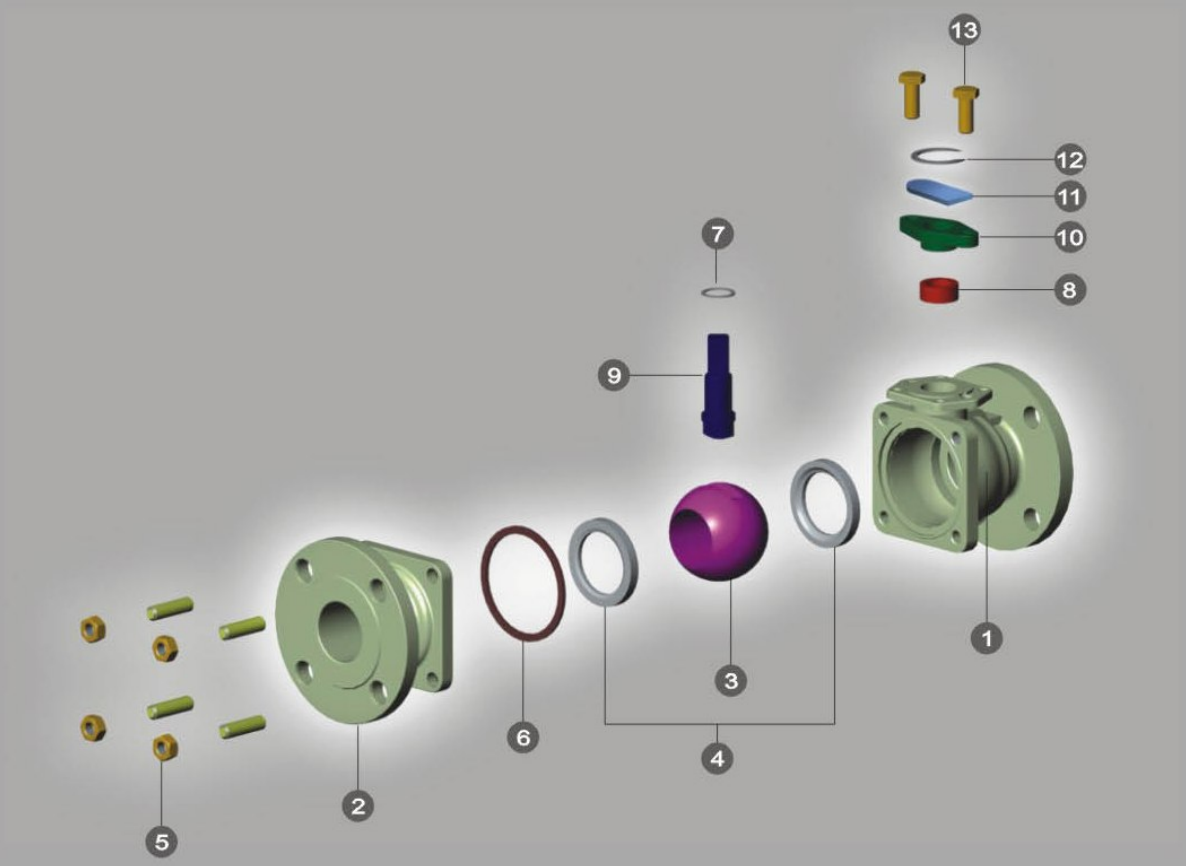

MATERIAL

NO	PART NAME	MATERIAL		
1	BODY	WCB (SCPH2)	CF8 (SCS13A)	CF8M (SCS14A)
2	CAP	WCB (SCPH2)	CF8 (SCS13A)	CF8M (SCS14A)
3	BALL	CF8 (SCS13A)		CF8M (SCS14A)
4	SEAT	PTFE / G-PTFE / C-PTFE		
5	BOLT&NUT	SUS 304		
6	GASKET	PTFE/GRAPHITE (FIRE SAFE)		
7	THRUST WASHER	PTFE		
8	STEM PACKING	PTFE/GRAPHITE (FIRE SAFE)		
9	STEM	SUS304		SUS316
10	GLAND	CF8 (SCS13A)		
11	TRAVEL STOP	SUS 304		
12	SNAP CATCH	SUS 304		
13	GLAND BOLT	SUS 304		
14	HANDLE	FCD45(15A~80A) / SGP/FCD45(100A~300A)		

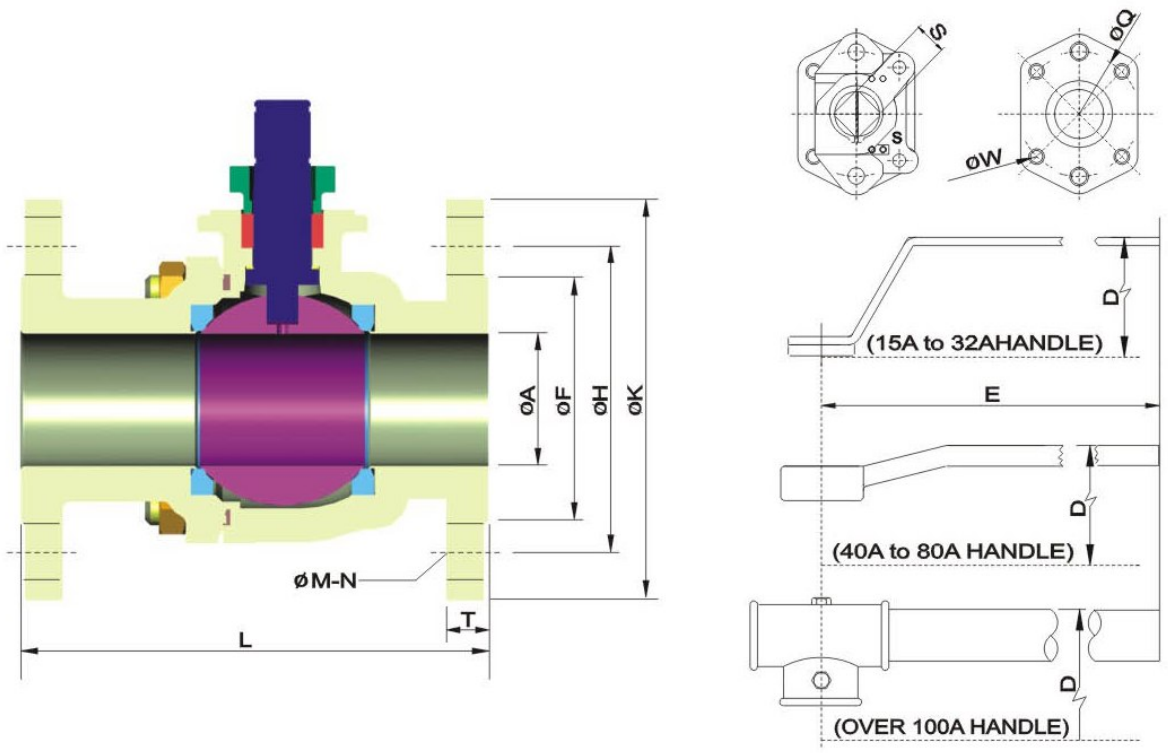

DIMENSION (JBF-A1 SERIES JIS 10K) (M.M.)

SIZE		A	D	S	E	L	K	T	H	F	M	N	Q	W
15	1/2"	15	63	10	130	108	95	12	70	51	15	4	42	M5
20	3/4"	20	68	10	130	117	100	14	75	56	15	4	42	M5
25	1"	25	76	12	160	127	125	14	90	67	19	4	50	M6
40	1-1/2"	38	88	17	224	165	140	16	105	81	19	4	70	M8
50	2"	50	94	17	224	178	155	16	120	96	19	4	70	M8
65	2-1/2"	65	115	20	324	190	175	18	140	116	19	4	70	M8
80	3"	76	120	20	324	203	185	18	150	126	19	8	70	M8
100	4"	100	195	27	400	229	210	18	175	151	19	8	102	M10
125	5"	125	220	27	550	356	250	20	210	182	23	8	102	M10
150	6"	150	240	32	550	394	280	22	240	212	23	8	125	M12
200	8"	200	300	35	1000	457	330	22	290	262	23	12	140	M16
250	10"	250	355	35	1000	533	400	24	355	324	25	12	140	M16
300	12"	300	-	46	-	610	445	24	400	368	25	16	165	M20

DIMENSION (JBF-A2 SERIES JIS-20K) (M.M.)

SIZE		A	D	S	E	L	K	T	H	F	M	N	Q	W
15	1/2"	15	63	10	130	140	95	14	70	51	15	4	42	M5
20	3/4"	20	68	10	130	152	100	16	75	56	15	4	42	M5
25	1"	25	76	12	160	165	125	16	90	67	19	4	50	M6
40	1-1/2"	38	88	17	224	190	140	18	105	81	19	4	70	M8
50	2"	50	94	17	224	216	155	18	120	96	19	8	70	M8
65	2-1/2"	65	115	20	324	241	175	20	140	116	19	8	70	M8
80	3"	76	120	20	324	283	200	22	160	132	23	8	70	M8
100	4"	100	195	27	400	305	225	24	185	160	23	8	102	M10
150	6"	150	240	32	550	403	305	28	260	230	25	12	125	M12
200	8"	200	300	35	1000	502	350	30	305	275	25	12	140	M16
250	10"	250	355	35	1000	568	430	34	380	345	27	12	140	M16
300	12"	300	-	46	-	648	480	36	430	395	27	16	165	M20

DIMENSION (JBF-A3 SERIES JIS-40K) (M.M.)

SIZE		A	D	S	E	L	K	T	H	F	M	N	Q	W
15	1/2"	15	63	10	130	165	115	20	80	55	19	4	42	M5
20	3/4"	20	68	10	130	190	120	20	85	60	19	4	42	M5
25	1"	25	76	12	160	216	130	22	95	70	19	4	50	M6
40	1-1/2"	38	120	17	224	241	160	24	120	90	23	4	70	M8
50	2"	50	140	17	224	292	165	26	130	105	19	8	70	M8
80	3"	76	180	22	324	356	210	32	170	140	23	8	102	M10
100	4"	100	240	32	550	432	250	36	205	165	25	8	125	M12
150	6"	150	300	35	1000	559	356	44	295	240	33	12	140	M16

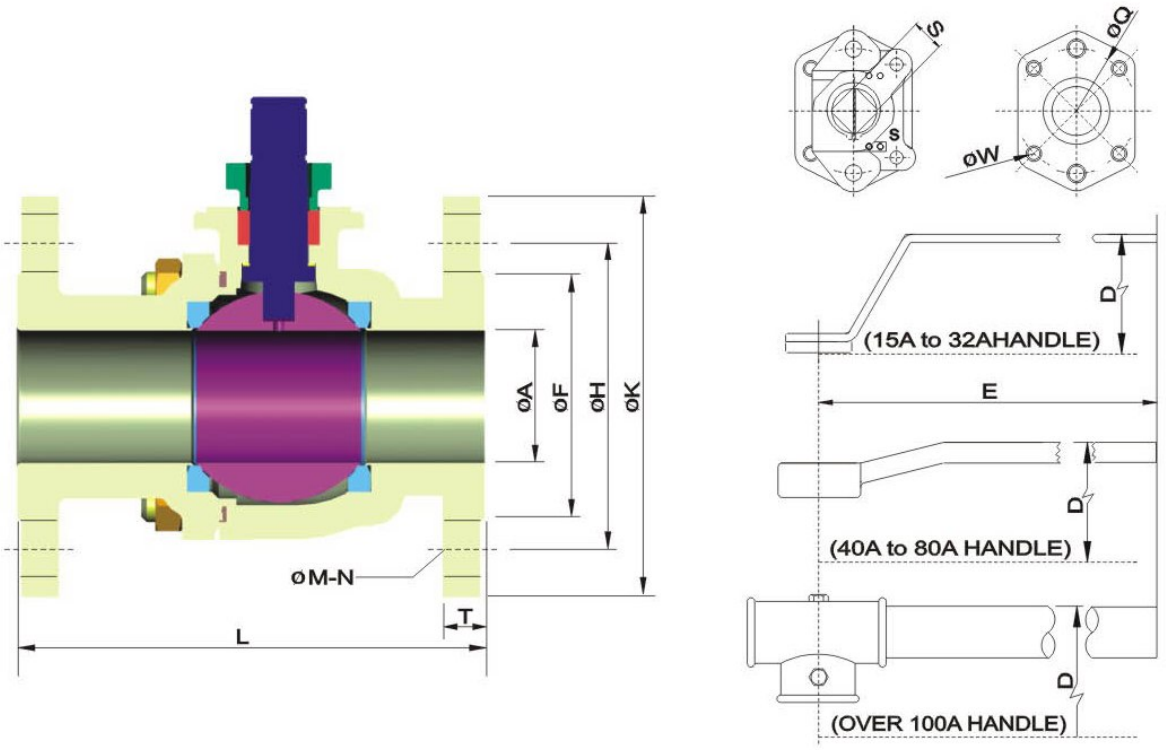

DIMENSION (JBF-C1 SERIES ANSI-150LB) (M.M.)

SIZE		A	D	S	E	L	K	T	H	F	M	N	Q	W
15	1/2"	15	63	10	130	108	89	11.2	60.5	35	16	4	42	M5
20	3/4"	20	68	10	130	117	98	11.2	70	43	16	4	42	M5
25	1"	25	76	12	160	127	108	11.2	79.5	51	16	4	50	M6
40	1-1/2"	38	88	17	224	165	127	14.3	98.5	73	16	4	70	M8
50	2"	50	94	17	224	178	152	15.9	120.5	92	19	4	70	M8
65	2-1/2"	65	115	20	324	190	178	17.5	139.5	105	19	4	70	M8
80	3"	76	120	20	324	203	190	19.1	152.5	127	19	4	70	M8
100	4"	100	195	27	400	229	229	23.9	190.5	157	19	8	102	M10
125	5"	125	220	27	550	356	254	23.9	216	186	22	8	102	M10
150	6"	150	240	32	550	394	279	25.4	241.5	216	22	8	125	M12
200	8"	200	300	35	1000	457	343	28.6	298.5	270	22	8	140	M16
250	10"	250	355	35	1000	533	406	30.2	362	324	25	12	140	M16
300	12"	300	-	46	-	610	483	31.8	432	381	25	12	165	M20

DIMENSION (JBF-C2 SERIES ANSI-300LB) (M.M.)

SIZE		A	D	S	E	L	K	T	H	F	M	N	Q	W
15	1/2"	15	63	10	130	140	95	14.3	66.5	35	16	4	42	M5
20	3/4"	20	68	10	130	152	117	15.9	82.5	43	19	4	42	M5
25	1"	25	76	12	160	165	124	17.5	89	51	19	4	50	M6
40	1-1/2"	38	88	17	224	190	156	20.7	114.5	73	22	4	70	M8
50	2"	50	94	17	224	216	165	22.3	127	92	19	8	70	M8
65	2-1/2"	65	115	20	324	241	190	25.4	149	105	22	8	70	M8
80	3"	76	120	20	324	283	210	28.6	168	127	22	8	70	M8
100	4"	100	195	27	400	305	254	31.8	200	157	22	8	102	M10
150	6"	150	240	32	550	403	318	36.6	270	216	22	12	125	M12
200	8"	200	300	35	1000	502	381	41.3	330	270	25	12	140	M16
250	10"	250	355	35	1000	568	444	47.7	387.5	324	29	16	140	M16
300	12"	300	-	46	-	648	521	50.8	451	381	32	16	165	M20

DIMENSION (JBF-C3 SERIES ANSI-600LB) (M.M.)

SIZE		A	D	S	E	L	K	T	H	F	M	N	Q	W
15	1/2"	15	63	10	130	165	95	20.9	66.5	35	16	4	42	M5
20	3/4"	20	68	10	130	190	117	22.3	82.5	43	19	4	42	M5
25	1"	25	76	12	160	216	124	23.9	89	51	19	4	50	M6
40	1-1/2"	38	120	17	224	241	156	28.7	114.5	73	22	4	70	M8
50	2"	50	150	17	224	292	165	31.8	127	92	19	8	70	M8
80	3"	76	185	22	445	356	210	38.2	168	127	22	8	102	M10
100	4"	100	252	32	550	432	273	44.5	216	157	25	8	125	M12
150	6"	150	322	35	550	559	356	54.1	292	216	29	12	140	M16

DIMENSION(JBF-D1 SERIES DIN PN10) (M.M.)

SIZE		A	D	S	E	L		K	T	H	F	M	N	Q	W
						F4	F5								
15	1/2"	15	63	10	130	115		95	14	65	45	14	4	42	M5
20	3/4"	20	68	10	130	120		105	16	75	58	14	4	42	M5
25	1"	25	76	12	160	125		115	16	85	68	14	4	50	M6
32	1-1/4"	32	84	12	160	130		140	16	100	78	18	4	50	M6
40	1-1/2"	40	88	17	224	140	240	150	16	110	88	18	4	70	M8
50	2"	50	94	17	224	150	250	165	18	125	102	18	4	70	M8
65	2-1/2"	65	115	20	324	170	270	185	18	145	122	18	8	70	M8
80	3"	76	120	20	324	180	280	200	20	160	138	18	8	70	M8
100	4"	100	195	27	400	190	300	220	20	180	158	18	8	102	M10
125	5"	125	220	27	550		325	250	22	210	188	18	8	102	M10
150	6"	150	240	32	550		350	285	22	240	212	22	8	125	M12
200	8"	200	300	35	1000		400	340	24	295	268	22	8	140	M16
250	10"	250	355	35	1000		450	395	26	350	320	22	12	140	M16

DIMENSION(JBF-D2 SERIES DIN PN16) (M.M.)

SIZE		A	D	S	E	L		K	T	H	F	M	N	Q	W
						F4	F5								
15	1/2"	15	63	10	130	115		95	14	65	45	14	4	42	M5
20	3/4"	20	68	10	130	120		105	16	75	58	14	4	42	M5
25	1"	25	76	12	160	125		115	16	85	68	14	4	50	M6
32	1-1/4"	32	84	12	160	130		140	16	100	78	18	4	50	M6
40	1-1/2"	40	88	17	224	140	240	150	16	110	88	18	4	70	M8
50	2"	50	94	17	224	150	250	165	18	125	102	18	4	70	M8
65	2-1/2"	65	115	20	324	170	270	185	18	145	122	18	8	70	M8
80	3"	76	120	20	324	180	280	200	20	160	138	18	8	70	M8
100	4"	100	195	27	400	190	300	220	20	180	158	18	8	102	M10
125	5"	125	220	27	550		325	250	22	210	188	18	8	102	M10
150	6"	150	240	32	550		350	285	22	240	212	22	8	125	M12
200	8"	200	300	35	1000		400	340	24	295	268	22	12	140	M16
250	10"	250	355	35	1000		450	405	26	355	320	26	12	140	M16

DIMENSION(JBF-D3 SERIES DIN PN25) (M.M.)

SIZE		A	D	S	E	L		K	T	H	F	M	N	Q	W
						F4	F5								
15	1/2"	15	63	10	130	115		95	16	65	45	14	4	42	M5
20	3/4"	20	68	10	130	120		105	18	75	58	14	4	42	M5
25	1"	25	76	12	160	125		115	18	85	68	14	4	50	M6
32	1-1/4"	32	84	12	160	130		140	18	100	78	18	4	50	M6
40	1-1/2"	40	88	17	224	140	240	150	18	110	88	18	4	70	M8
50	2"	50	94	17	224	150	250	165	20	125	102	18	4	70	M8
65	2-1/2"	65	115	20	324	170	270	185	22	145	122	18	8	70	M8
80	3"	76	120	20	324	180	280	200	24	160	138	18	8	70	M8
100	4"	100	195	27	400	190	300	235	24	190	162	22	8	102	M10
125	5"	125	220	32	550		325	270	26	220	188	26	8	125	M12
150	6"	150	240	32	550		350	300	28	250	218	26	8	125	M12
200	8"	200	300	35	1000		400	360	30	310	278	26	12	140	M16
250	10"	250	355	35	1000		450	425	32	370	335	30	12	140	M16

DIMENSION(JBF-D4 SERIES DIN PN40) (M.M.)

SIZE		A	D	S	E	L		K	T	H	F	M	N	Q	W
						F4	F5								
15	1/2"	15	63	10	130	115		95	16	65	45	14	4	42	M5
20	3/4"	20	68	10	130	120		105	18	75	58	14	4	42	M5
25	1"	25	76	12	160	125		115	18	85	68	14	4	50	M6
32	1-1/4"	32	84	12	160	130		140	18	100	78	18	4	50	M6
40	1-1/2"	40	88	17	224	140	240	150	18	110	88	18	4	70	M8
50	2"	50	94	17	224	150	250	165	20	125	102	18	4	70	M8
65	2-1/2"	65	115	20	324	170	270	185	22	145	122	18	8	70	M8
80	3"	76	120	20	324	180	280	200	24	160	138	18	8	70	M8
100	4"	100	195	27	400	190	300	235	24	190	162	22	8	102	M10
125	5"	125	220	32	550		325	270	26	220	188	26	8	125	M12
150	6"	150	240	32	550		350	300	28	250	218	26	8	125	M12
200	8"	200	300	35	1000		400	375	34	320	285	30	12	140	M16
250	10"	250	355	35	1000		450	450	38	385	345	33	12	140	M16

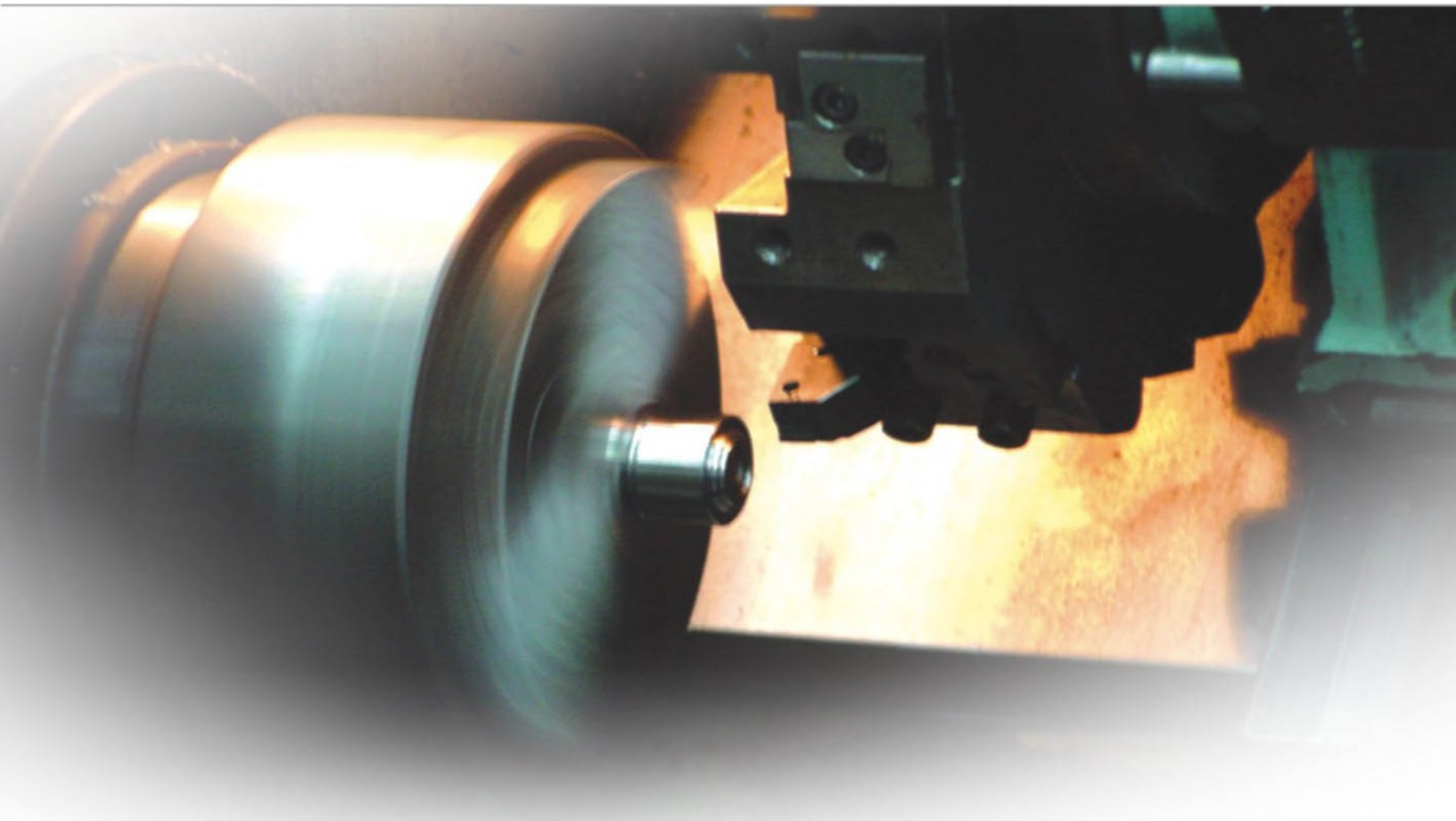

FULL BORE Cv

SIZE(MM)	15	20	25	32	40	50	60	80	100	125	150	200	250	300
Cv	25	50	90	160	245	460	750	1250	2400	3600	5400	10500	17500	26000

PRESSURE DROP vs FLOW RATE

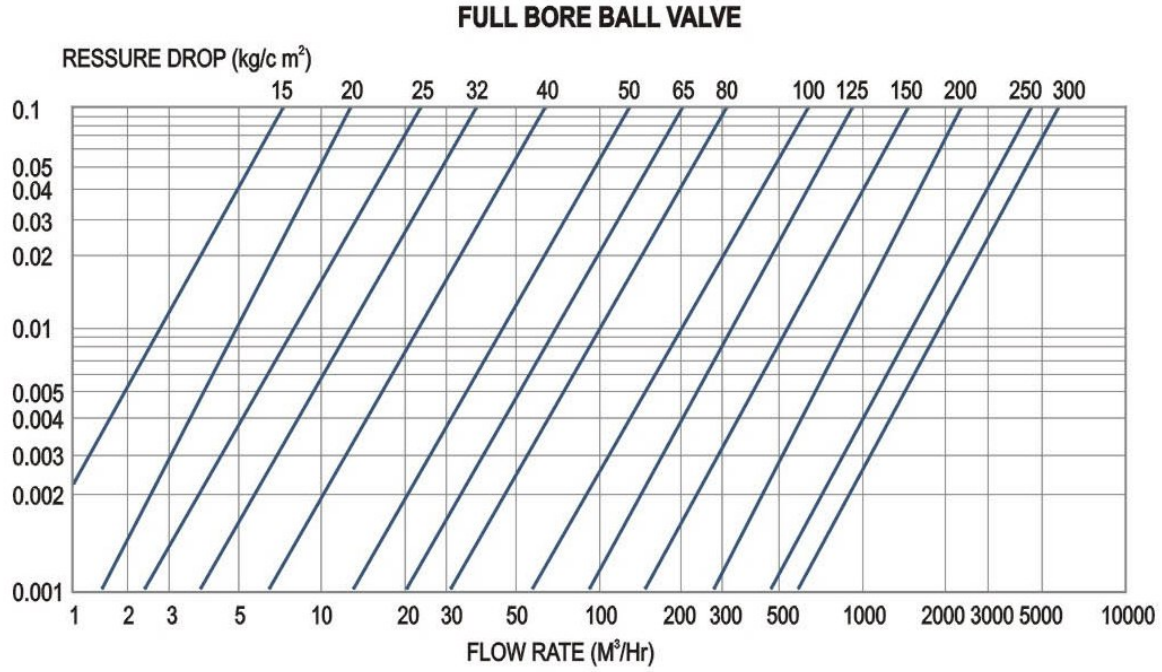

TEMPERATURE & PRESSURE CURVE

DN 15~DN 25

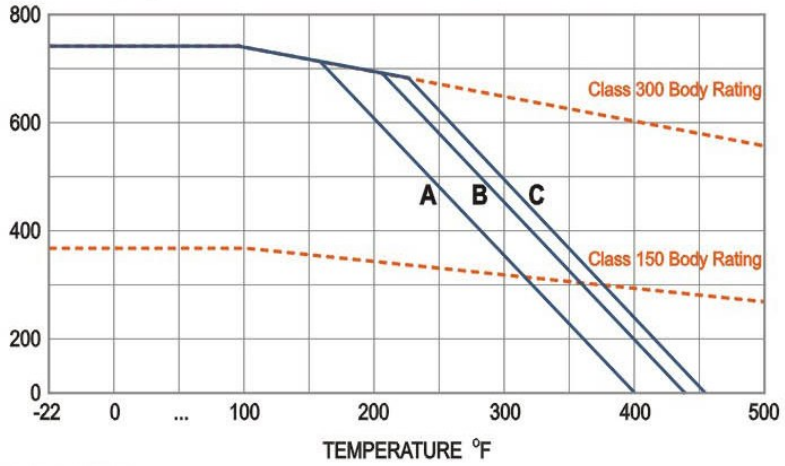

A=Virgin PTFE
B=Glass Fiber PTFE
C=Carbon Fiber PTFE

DN 32~DN 50

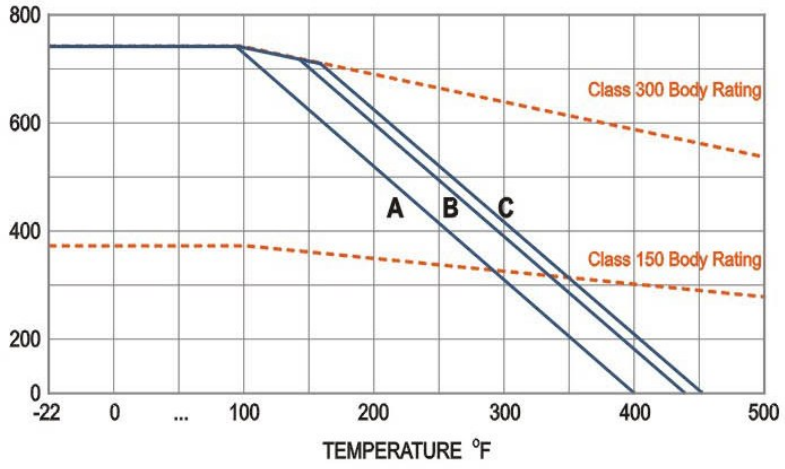

DN 65~DN 100

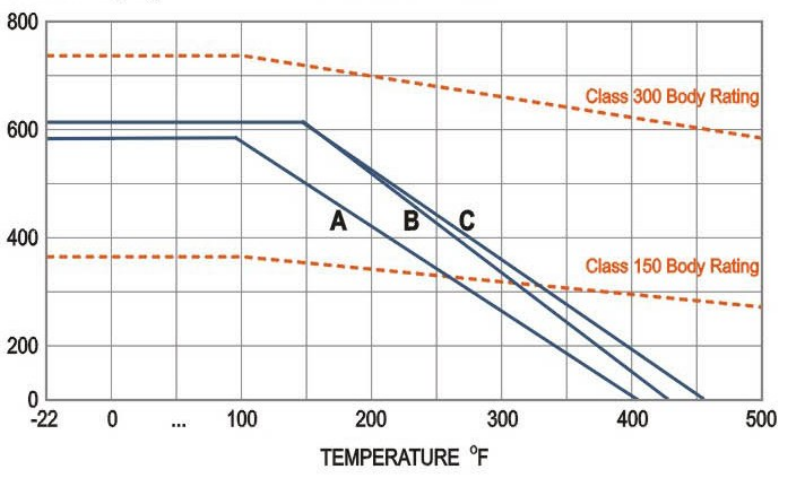

DN 125~DN 150

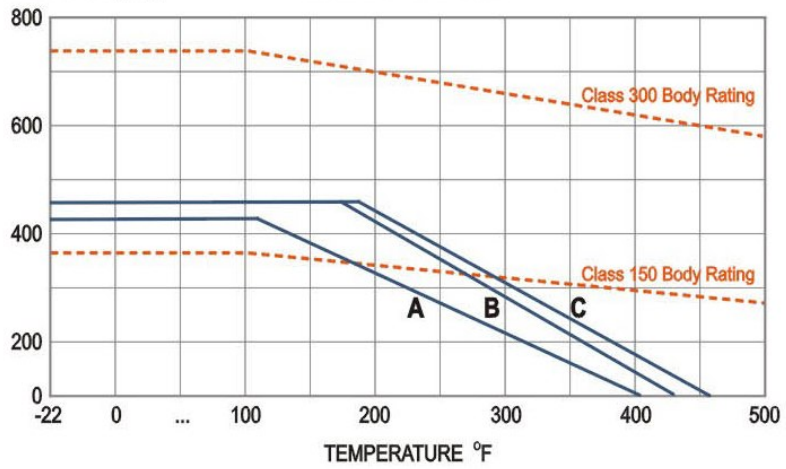

DN 200~DN 300

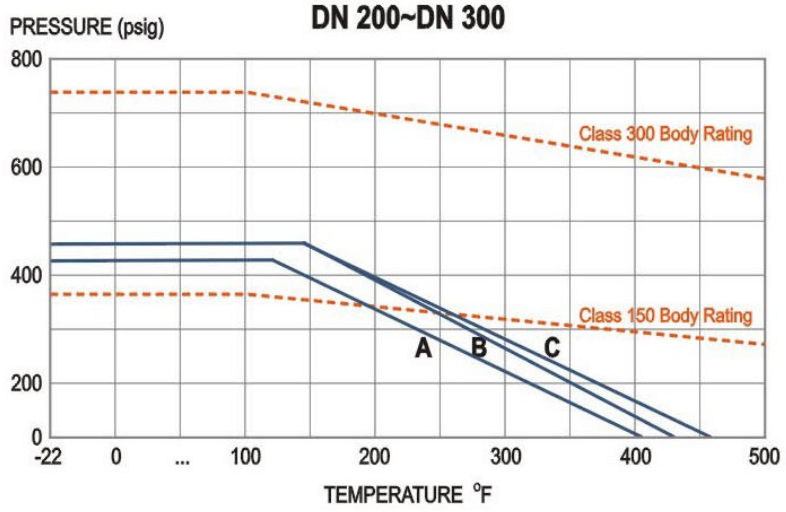

DN 15~DN 150(CLASS 600)

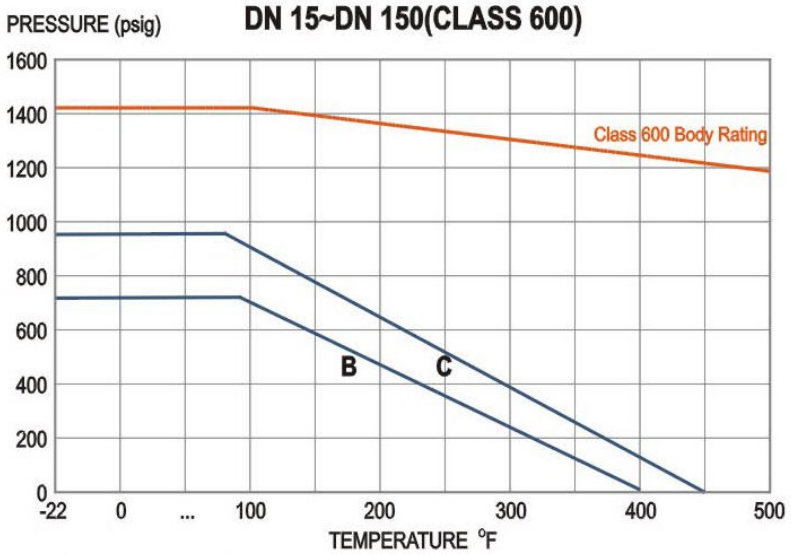

B=Glass Fiber PTFE
C=Carbon Fiber PTFE



API 6D

ISO 9001

CE



HOW TO ORDER

JBF→ A → B → C D → E → F

Ex: JBF→ A1 → 03 → A P → 050 → FLH

A. SPECIFICATION

A1	JIS 10K
A2	JIS 20K
A3	JIS 40K
C1	ANSI 150LB
C2	ANSI 300LB
C3	ANSI 600LB
D1	DIN PN10
D2	DIN PN16
D3	DIN PN25
D4	DIN PN40

B. BODY MAT'L

01	FC-20
02	WCB
03	CF8
04	CF8M
05	CF3
06	CF3M
07	CG8M
08	CG3M
11	LCB
12	LCC

C. BALL & STEM MAT'L

A	CF8
C	CF8M
D	CF3
E	CF3M
F	CG8M
H	CG3M

D. SEAT MAT'L

P	PTFE
G	GLASS FIBER 15%+PTFE
C	CARBON 15%+PTFE
S	316 50%+PTFE 50%
T	TFM-1600
E	PEEK

E. SIZE

015	1/2"
020	3/4"
025	1"
032	1-1/4"
040	1-1/2"
050	2"
065	2-1/2"
080	3"
100	4"
125	5"
150	6"
200	8"
250	10"
300	12"

F. OPTION

F	FIRE SAFE
L	LONG STEM
I	LIFE LOADING
H	LEVER
G	GEAR

HOW TO ORDER

HEAD OFFICE
JDV CONTROL VALVES CO., LTD

NO. 2-2, LANE 292, SHIN NUNG ROAD, SHIN WU TOWN 327, TAOYUAN HSIEN, TAIWAN.
■ FACTORY
TEL: 886-3-4203366 FAX: 886-3-4202268 E-MAIL: webmaster@jdv.com.tw
■ SALES DEPARTMENT
TEL: 886-3-4205707 FAX: 886-3-4206818 E-MAIL: sales@jdv.com.tw

Copyright 2009/10. All rights are reserved by JDV. Technical data and content may be changed by JDV as necessary.

6D-0539 ISO 9001 CE 0575