JDV CONTROL VALVES

JBFM Series

Floating Type Metal Seat Ball Valve



JDV CONTROL VALVES

JBFM Series

Floating Type Metal Seat Ball Valve

Full Bore Two-Piece Flanged Ends

JIS 10/20/40K ANSI 150/300/600LB DIN PN10/16/25/40

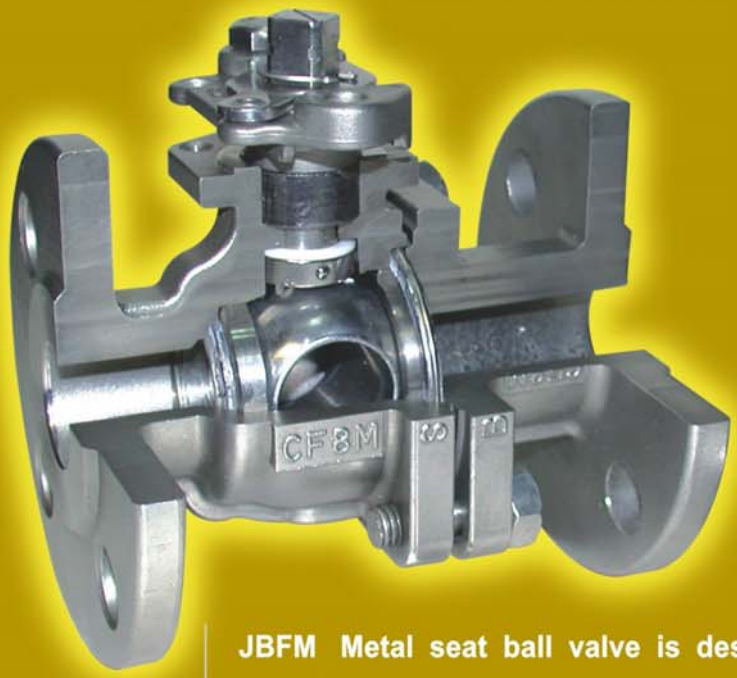

JBFM Metal seat ball valve is designed for using in the severe conditions such as higher temperature and abrasive fluid in fields of Oil & Gas, Petroleum, Petrochemical, Chemical, Power Generation, Pulp & Paper, Mining industries.

Product Features

1. Highly precise machining enables the ball and seats to touch tightly offering the superior shut-off.
2. Spring-loaded seats keeps close contact with the ball ensuring tight sealing even at low pressure condition.
   This makes the valve keep stable opening and closing torques under the high differential pressure environment.
3. Fire Safe Design conforms to API 607 4th Edition
4. Selective material for different service applications.
5. Hard face treatment on ball and seats provides longer life cycle in severe environment.

Applications

1.Abrasive fluids

2.High temperature environments



HVOF Thermal Spray

Design & Structures

Gland Packing : Flexible Graphite

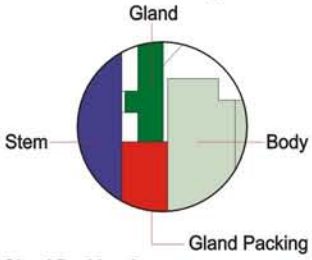

Gland Packing Area
Graphite gland packing designed for Fire Safe ensures the safety under fire accident.



Stem : SUS316/SUS630/Inconel 718

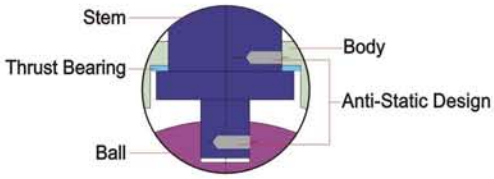

Stem Area
Stem with integral flange provides blowout-proof protection if the packing is loosed.

Seat Spring :
Inconel X750



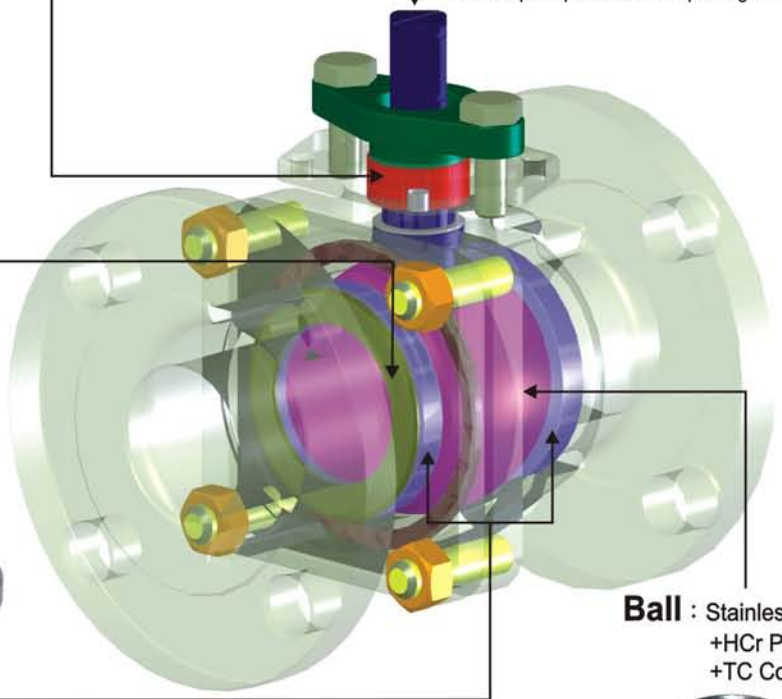

Ball : Stainless Steel
+HCr Plated
+TC Coated



Seat : Stainless Steel
+Stellite Welded
+TC Coated

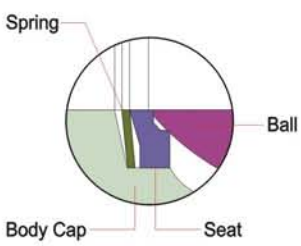

Seat Area(Upstream Side)
Seat Spring provides flexibility to piping stress and thermal expansion for stabilizing the operation.

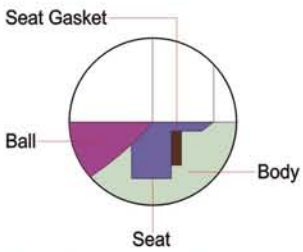

Seat Area(Downstream Side)
Seat-Gasket is Pressed-fit into the body and this provides the stability for a wide temperatures range.

JDV CONTROL VALVES

Applicable Standards

- Body material：Standard in WCB, CF8, CF8M
  Special material is available according to requirements.
- Nominal size：1/2" to 8" (DN15 to DN200)
- Pressure rating：JIS 10/20/40K
  ANSI 150/300/600LB
  DIN PN10/16/25/40
- End connections：Raised face flange
- Temperature Range：- 29 Deg C to 500 Deg C
- Face-To-Face Dimensions： JIS B2002 / ANSI B16.10
- Flange Dimensions：JIS B2238 / ANSI B16.5
- Body Pressure Testing：JIS B2003 / ANSI B16.34 / API 598
- Seat Leakage Testing：ANSI B16.104/FCI70-2 CLASS V
- Casting：MSS SP-61 / MSS-SP-25 / MSS-SP-55

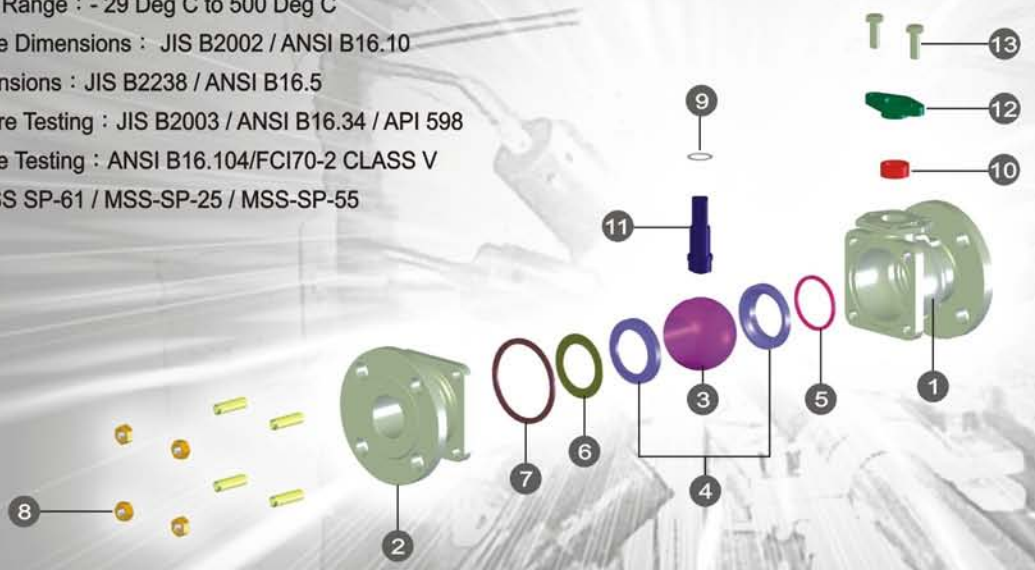

Technical Specification

MATERIAL

NO	TEMPERATURE	SM			SH		
		-29°C~350°C			-29°C~425°C	29°C~500°C	
1	BODY	WCB	CF8	CF8M	WCB	CF8	CF8M
2	CAP	WCB	CF8	CF8M	WCB	CF8	CF8M
3	BALL	CF8 / CF8M + HCr			CF8 / CF8M + TC		
4	SEAT	SUS304 / SUS316 + STELLITE			SUS304 / SUS316 + TC		
5	SEAT GASKET	GRAPHITE					
6	SEAT SPRING	INCONEL X750					
7	BODY GASKET	SUS316 + GRAPHITE					
8	JOINT BOLT & NUT	B7&2H	B8&8		B7&2H	B8&8	
9	THRUST WASHER	STAINLESS STEEL					
10	GLAND PACKING	FLEXIBLE GRAPHITE					
11	STEM	SUS316/SUS630			INCONEL 718		
12	GLAND	SUS304					
13	GLAND BOLT	SUS304					

Notes:
HCr = Hard Chrome Plated
TC = Tungsten Carbide Coated

Above materials may vary with different using conditions.

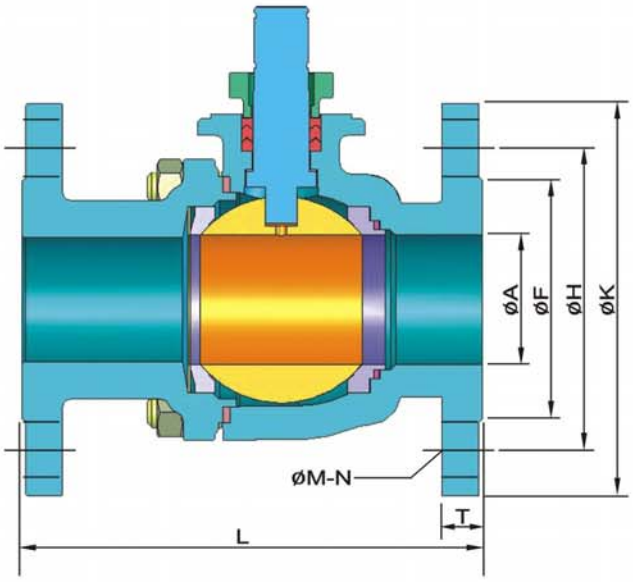

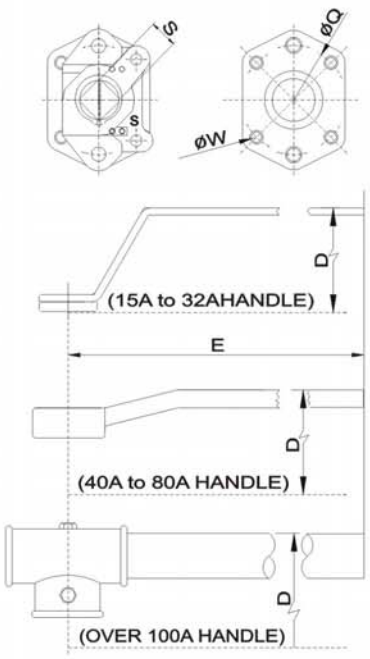

DIMENSION (JBFM-A1 SERIES JIS-10K) (M.M.)

Size		A	D	S	E	L	K	T	H	F	M	N	Q	W
15	1/2"	15	63	10	130	108	95	12	70	51	15	4	42	M5
20	3/4"	20	68	10	130	117	100	14	75	56	15	4	42	M5
25	1"	25	76	12	160	127	125	14	90	67	19	4	50	M6
40	1-1/2"	38	88	17	224	165	140	16	105	81	19	4	70	M8
50	2"	50	94	17	224	178	155	16	120	96	19	4	70	M8
65	2-1/2"	65	115	20	324	190	175	18	140	116	19	4	70	M8
80	3"	76	120	20	324	203	185	18	150	126	19	8	70	M8
100	4"	100	195	27	400	229	210	18	175	151	19	8	102	M10
125	5"	125	220	27	550	356	250	20	210	182	23	8	102	M10
150	6"	150	240	27	550	394	280	22	240	212	23	8	102	M12
200	8"	200	300	35	1000	457	330	22	290	262	23	12	140	M16

DIMENSION (JBFM-A2 SERIES JIS-20K) (M.M.)

Size		A	D	S	E	L	K	T	H	F	M	N	Q	W
15	1/2"	15	63	10	130	140	95	14	70	51	15	4	42	M5
20	3/4"	20	68	10	130	152	100	16	75	56	15	4	42	M5
25	1"	25	76	12	160	165	125	16	90	67	19	4	50	M6
40	1-1/2"	38	88	17	224	190	140	18	105	81	19	4	70	M8
50	2"	50	94	17	224	216	155	18	120	96	19	8	70	M8
65	2-1/2"	65	115	20	324	241	175	20	140	116	19	8	70	M8
80	3"	76	120	20	324	283	200	22	160	132	23	8	70	M8
100	4"	100	195	27	400	305	225	24	185	160	23	8	102	M10
150	6"	150	240	27	550	403	305	28	260	230	25	12	125	M12
200	8"	200	300	35	1000	502	350	30	305	275	25	12	140	M16

DIMENSION (JBFM-A3 SERIES JIS-40K) (M.M.)

Size		A	D	S	E	L	K	T	H	F	M	N	Q	W
15	1/2"	15	63	10	130	165	115	20	80	55	19	4	42	M5
20	3/4"	20	68	10	130	190	120	20	85	60	19	4	42	M5
25	1"	25	76	12	160	216	130	22	95	70	19	4	50	M6
40	1-1/2"	38	120	17	224	241	160	24	120	90	23	4	70	M8
50	2"	50	140	17	224	292	165	26	130	105	19	8	70	M8
80	3"	76	180	22	324	356	210	32	170	140	23	8	70	M8
100	4"	100	240	27	550	432	250	36	205	165	25	8	102	M10

DIMENSION (JBFM-C1 SERIES ANSI-150LB) (M.M.)

Size		A	D	S	E	L	K	T	H	F	M	N	Q	W
15	1/2"	15	63	10	130	108	95	11.2	60.5	35	16	4	42	M5
20	3/4"	20	68	10	130	117	98	11.2	70	43	16	4	42	M5
25	1"	25	76	12	160	127	108	11.2	79.5	51	16	4	50	M6
40	1-1/2"	38	88	17	224	165	127	14.3	98.5	73	16	4	70	M8
50	2"	50	94	17	224	178	152	15.9	120.5	92	19	4	70	M8
65	2-1/2"	65	115	20	324	190	178	17.5	139.5	105	19	4	70	M8
80	3"	76	120	20	324	203	190	19.1	152.5	127	19	4	70	M8
100	4"	100	195	27	400	229	210	23.9	190.5	157	19	8	102	M10
125	5"	125	220	27	550	356	254	23.9	216	186	22	8	102	M10
150	6"	150	240	27	550	394	279	25.4	241.5	216	22	8	102	M12
200	8"	200	300	35	1000	457	343	28.6	298.5	270	22	8	140	M16

DIMENSION (JBFM-C2 SERIES ANSI-300LB) (M.M.)

SIZE		A	D	S	E	L	K	T	H	F	M	N	Q	W
15	1/2"	15	63	10	130	140	95	14.3	66.5	35	16	4	42	M5
20	3/4"	20	68	10	130	152	117	15.9	82.5	43	19	4	42	M5
25	1"	25	76	12	160	165	124	17.5	89	51	19	4	50	M6
40	1-1/2"	38	88	17	224	190	156	20.7	114.5	73	22	4	70	M8
50	2"	50	94	17	224	216	165	22.3	127	92	19	8	70	M8
65	2-1/2"	65	115	20	324	241	190	25.4	149.0	105	22	8	70	M8
80	3"	76	120	20	324	283	210	28.6	168	127	22	8	70	M8
100	4"	100	195	27	400	305	254	31.8	200	157	22	8	102	M10
150	6"	150	240	32	550	403	318	36.6	270	216	22	12	125	M12
200	8"	200	300	35	1000	502	381	41.3	330.2	270	25	12	140	M16

DIMENSION (JBFM-C3 SERIES ANSI-600LB) (M.M.)

SIZE		A	D	S	E	L	K	T	H	F	M	N	Q	W
15	1/2"	15	63	10	130	165	95	20.9	66.5	35	16	4	42	M5
20	3/4"	20	68	10	130	190	117	22.3	82.5	43	19	4	42	M5
25	1"	25	76	12	160	216	124	23.9	89	51	19	4	50	M6
40	1-1/2"	38	120	17	224	241	156	28.7	114.5	73	22	4	70	M8
50	2"	50	140	17	224	292	165	31.8	127	92	19	8	70	M8
80	3"	76	180	22	324	356	210	38.2	168	127	22	8	70	M8
100	4"	100	240	27	550	432	273	44.5	216	157	25	8	102	M10

DIMENSION (JBFM-D1 SERIES DIN PN10) (M.M.)

SIZE		A	D	S	E	L		K	T	H	F	M	N	Q	W
						F4	F5								
DN 15~DN 50 USE PN40															
DN 65~DN 150 USE PN16															
200	8"	200	300	35	1000		400	340	24	295	268	22	8	140	M16

DIMENSION (JBFM-D2 SERIES DIN PN16) (M.M.)

SIZE		A	D	S	E	L		K	T	H	F	M	N	Q	W
						F4	F5								
DN 15~DN 50 USE PN40															
65	2-1/2"	65	115	20	324	170	270	185	20	145	122	18	4	70	M8
80	3"	76	120	20	324	180	280	200	20	160	138	18	8	70	M8
100	4"	100	195	27	400	190	300	220	20	180	158	18	8	102	M10
150	6"	150	240	32	550		350	285	22	240	212	22	8	125	M12
200	8"	200	300	35	1000		400	340	24	295	268	22	12	140	M16

DIMENSION (JBFM-D3 SERIES DIN PN25) (M.M.)

SIZE		A	D	S	E	L		K	T	H	F	M	N	Q	W
						F4	F5								
DN 15~DN 150 USE PN40															
200	8"	200	300	35	1000		400	360	30	310	278	26	12	140	M16

DIMENSION (JBFM-D4 SERIES DIN PN40) (M.M.)

SIZE		A	D	S	E	L		K	T	H	F	M	N	Q	W
						F4	F5								
15	1/2"	15	63	10	130	115		95	16	65	45	14	4	42	M5
20	3/4"	20	68	10	130	120		105	18	75	58	14	4	42	M5
25	1"	25	76	12	160	125		115	18	85	68	14	4	50	M6
40	1-1/2"	38	88	17	224	140	240	150	18	110	88	18	4	70	M8
50	2"	50	94	17	224	150	250	165	20	125	102	18	4	70	M8
65	2-1/2"	65	115	20	324	170	270	185	22	145	122	18	8	70	M8
80	3"	76	120	20	324	180	280	200	24	160	138	18	8	70	M8
100	4"	100	195	27	400	190	300	235	24	190	162	22	8	102	M10
150	6"	150	240	32	550		350	300	28	250	218	26	8	125	M12
200	8"	200	300	35	1000		400	375	34	320	285	30	12	140	M16

TEMPERATURE & PRESSURE CURVE

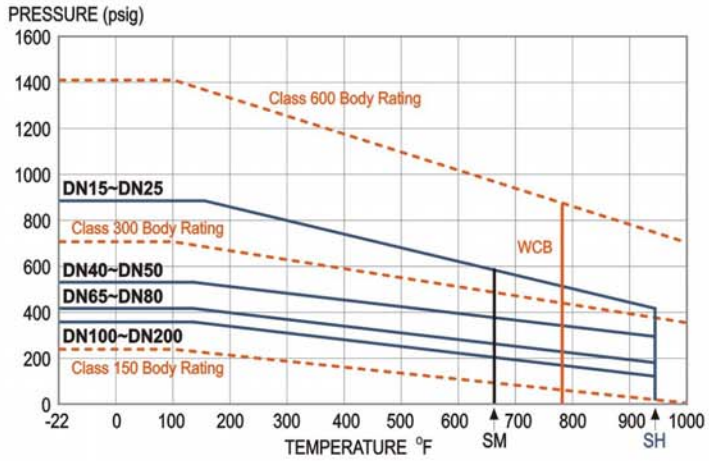

SM = MAX TEMPERATURE 661°F (350°C)
SH = MAX TEMPERATURE 932°F (500°C)
WCB = MAX TEMPERATURE 797°F (425°C)



API 6D ISO 9001 CE

HOW TO ORDER

JBFM → A → B → C D → E → F → G

Ex: JBFM → C1 → 03 → A A → 050 → FLH → SM

A. SPECIFICATION

A1	JIS 10K
A2	JIS 20K
A3	JIS 40K
C1	ANSI 150LB
C2	ANSI 300LB
C3	ANSI 600LB
D1	DIN PN10
D2	DIN PN16
D3	DIN PN25
D4	DIN PN40

B. BODY MAT'L

02	WCB
03	CF8
04	CF8M
05	CF3
06	CF3M
07	CG8M
08	CG3M
11	LCB
12	LCC

C. BALL & STEM MAT'L

A	CF8
C	CF8M
D	CF3
E	CF3M
F	CG8M
H	CG3M

D. SEAT MAT'L

A	CF8
C	CF8M
D	CF3
E	CF3M
F	CG8M
H	CG3M

E. SIZE

015	1/2"
020	3/4"
025	1"
040	1-1/2"
050	2"
065	2-1/2"
080	3"
100	4"
125	5"
150	6"
200	8"

F. OPTION

F	FIRE SAFE
L	LONG STEM
I	LIFE LOADING
H	LEVER
G	GEAR

G. TEMPERATURE

SM	-29°C~ 350°C
SH	-29°C~ 500°C (CARBON STEEL MAX 425°C)

HOW TO ORDER

HEAD OFFICE
JDV CONTROL VALVES CO., LTD

NO. 2-2, LANE 292, SHIN NUNG ROAD, SHIN WU TOWN 327, TAOYUAN HSIEN, TAIWAN.
■ FACTORY
TEL: 886-3-4203366 FAX: 886-3-4202268 E-MAIL: webmaster@jdv.com.tw
■ SALES DEPARTMENT
TEL: 886-3-4205707 FAX: 886-3-4206818 E-MAIL: sales@jdv.com.tw

Copyright 2008/08. All rights are reserved by JDV. Technical data and content may be changed by JDV as necessary

6D-0539 ISO 9001 0575