JDV CONTROL VALVES

JBK/JBKM Series

Floating Type Soft Metal Seat Steam Jacket Ball Valve



JDV
CONTROL
VALVES

JBK/JBKM Series

Floating Type Metal/Soft-Seat Steam Jacket Ball Valve

Full-Bore One-Piece Flanged Ends
JIS 10/20K ANSI-150/300LB

JBK/JBKM Series ball valves are designed for keeping fluid in specific temperature during the process. Optional seat materials provide the wider range of application to satisfy various industrial environments.



Product Features

1. 1-PC valve body prevents the leakage from joint side
2. Fully jacketed design keeps
   the fluid temperature heated or cooled evenly.
3. Seats are available in soft-seat and
   metal-seat designs.
4. Anti-Static design
5. Anti-blow out stem design (Size 2-1/2" and above)
6. ISO 5211 mounting pad
7. Fire Safe design

Applicable Standards

- Body material：Standard in CF8, CF8M
  Special material is available according to requirements.
- Normal size：1/2" to 8" (DN15 to DN200)
- Pressure rating：JIS 10/20K
  ANSI 150/300LB
- End connections：Raised face flange
- Temperature Range：(Soft Seat)：-29 Deg C to 180 Deg C
  (Metal Seat)：-29 Deg C to 350 Deg C
- Face-To-Face Dimensions：JIS B2002/ANSI B16.10
- Flange Dimensions：JIS B2220/ANSI B16.5
- Body Pressure Testing：JIS B2003/ANSI B16.34/API 6D
- Seat Leakage Testing：(Soft Seat)：ANSI B16.34/API 6D CLASS VI
  (Metal Seat)：ANSI B16.104/FCI 70-2 CLASS V
- Casting：MSS-SP61/MSS-SP25/MSS-SP55

Applications

1.Heat the fluids not to solidify

2.Cool the volatile fluids

Design & Structures

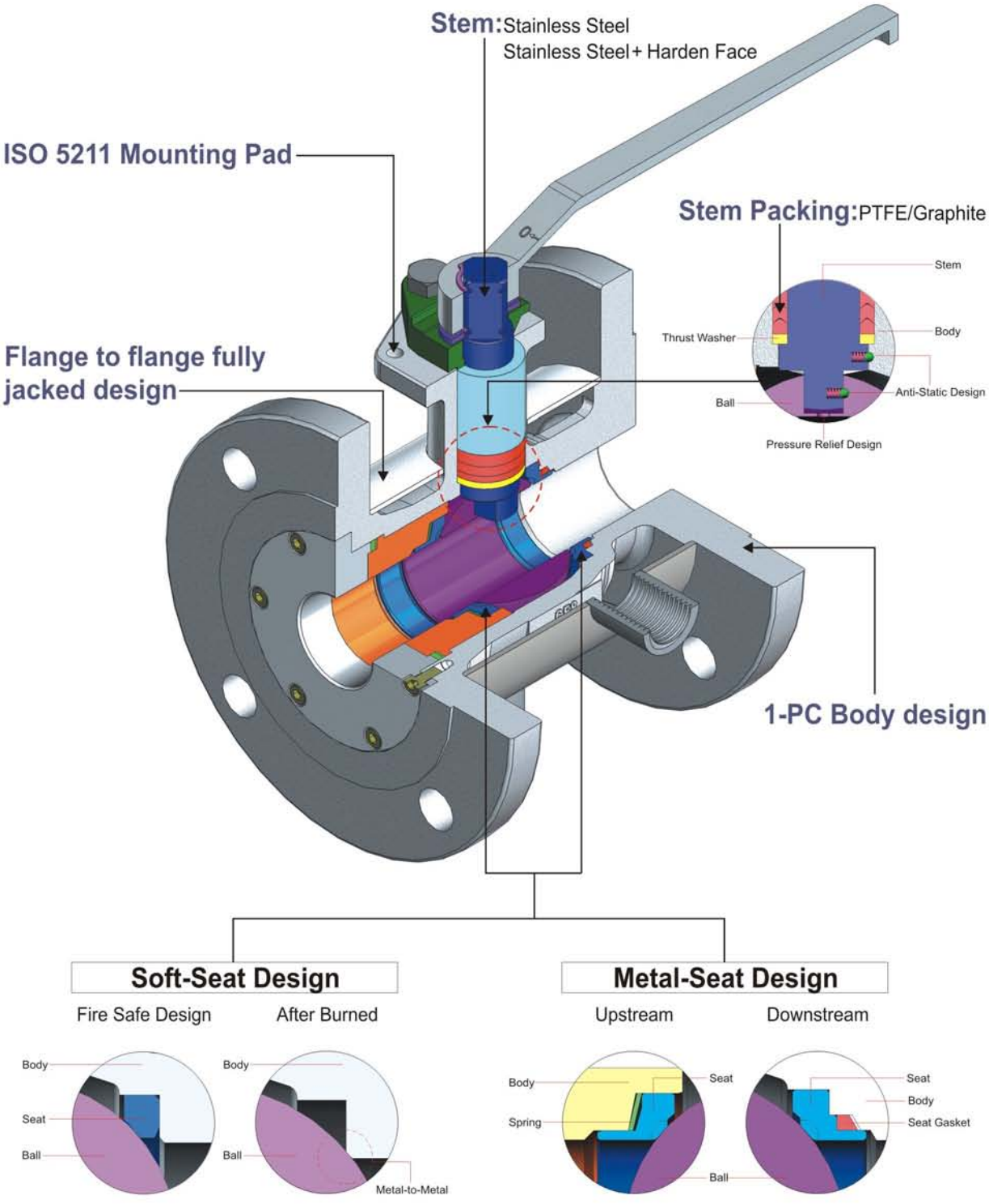

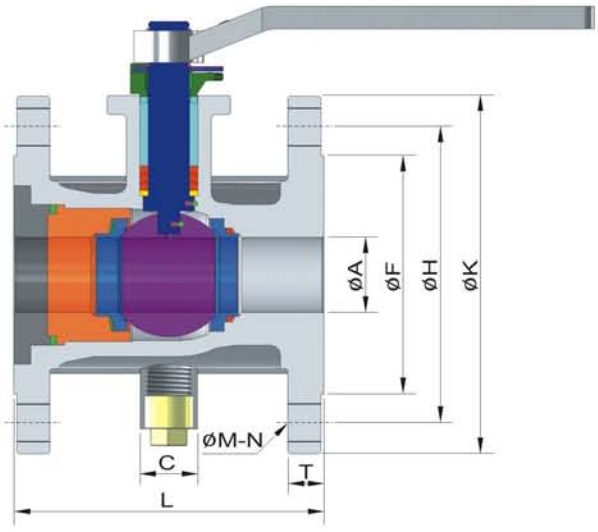

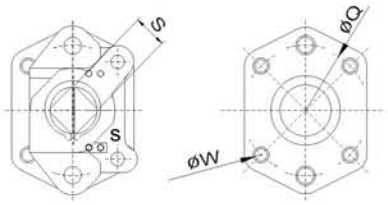

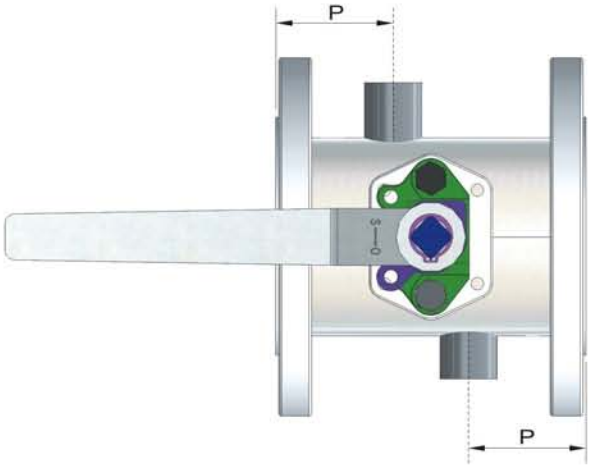

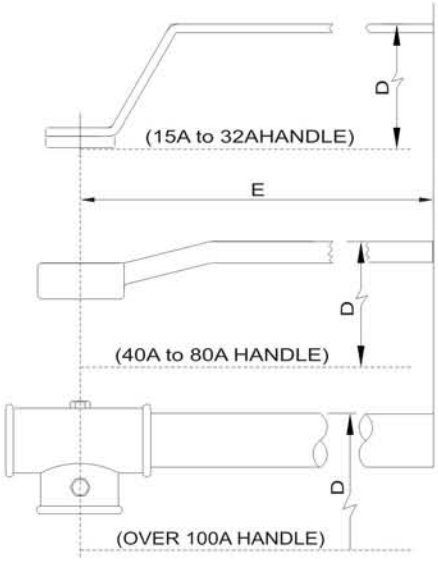

DIMENSIONS (JBK/JBKM-A1 SERIES JIS-10K) (M.M.)

PORT SIZE		FLANGE SIZE		A	D	S	E	L	K	T	H	F	M	N	Q	W	P	C
15	1/2"	40	1-1/2"	15	63	10	130	108	140	16	105	81	19	4	42	M5	41	NPT 1/2"
20	3/4"	40	1-1/2"	20	68	10	130	117	140	16	105	81	19	4	42	M5	45.5	NPT 1/2"
25	1"	50	2"	25	76	12	160	127	155	16	120	96	19	4	50	M6	50.5	NPT 3/4"
40	1-1/2"	65	2-1/2"	38	88	17	224	165	175	18	140	116	19	4	70	M8	62.5	NPT 3/4"
50	2"	80	3"	50	94	17	224	175	185	18	150	126	19	9	70	M8	68	NPT 3/4"
65	2-1/2"	100	4"	65	115	20	324	190	210	18	175	151	19	9	70	M8	75	NPT 3/4"
80	3"	125	5"	76	120	20	324	203	250	20	210	182	23	9	70	M8	82	NPT 3/4"
100	4"	150	6"	100	195	27	400	229	280	22	240	212	23	9	102	M10	82.5	NPT 3/4"
150	6"	200	8"	150	240	32	550	394	330	22	290	262	23	12	125	M12	157	NPT 3/4"
200	8"	300	12"	200	300	35	1000	457	445	24	400	368	23	16	140	M16	173.5	NPT 3/4"

DIMENSIONS (JBK/JBKM-A2 SERIES JIS-20K) (M.M.)

PORT SIZE		FLANGE SIZE		A	D	S	E	L	K	T	H	F	M	N	Q	W	P	C
15	1/2"	40	1-1/2"	15	63	10	130	140	140	18	105	81	19	4	42	M5	57	NPT 1/2"
20	3/4"	40	1-1/2"	20	68	10	130	152	140	18	105	81	19	4	42	M5	63	NPT 1/2"
25	1"	50	2"	25	76	12	160	165	155	18	120	96	19	8	50	M6	69.5	NPT 3/4"
40	1-1/2"	65	2-1/2"	38	88	17	224	190	175	20	140	116	19	8	70	M8	75	NPT 3/4"
50	2"	80	3"	50	94	17	224	216	200	22	160	132	23	8	70	M8	87	NPT 3/4"
65	2-1/2"	100	4"	65	115	20	324	241	225	24	185	160	23	8	70	M8	100.5	NPT 3/4"
80	3"	125	5"	76	120	20	324	283	270	26	225	195	25	8	70	M8	122	NPT 3/4"
100	4"	150	6"	100	195	27	400	305	305	28	260	230	25	12	102	M10	120.5	NPT 3/4"
150	6"	200	8"	150	240	32	550	403	350	30	305	275	25	12	125	M12	161.5	NPT 3/4"
200	8"	300	12"	200	300	35	1000	502	480	36	430	395	27	16	140	M16	196	NPT 3/4"

JDV CONTROL VALVES

JBK & JBKM SERIES

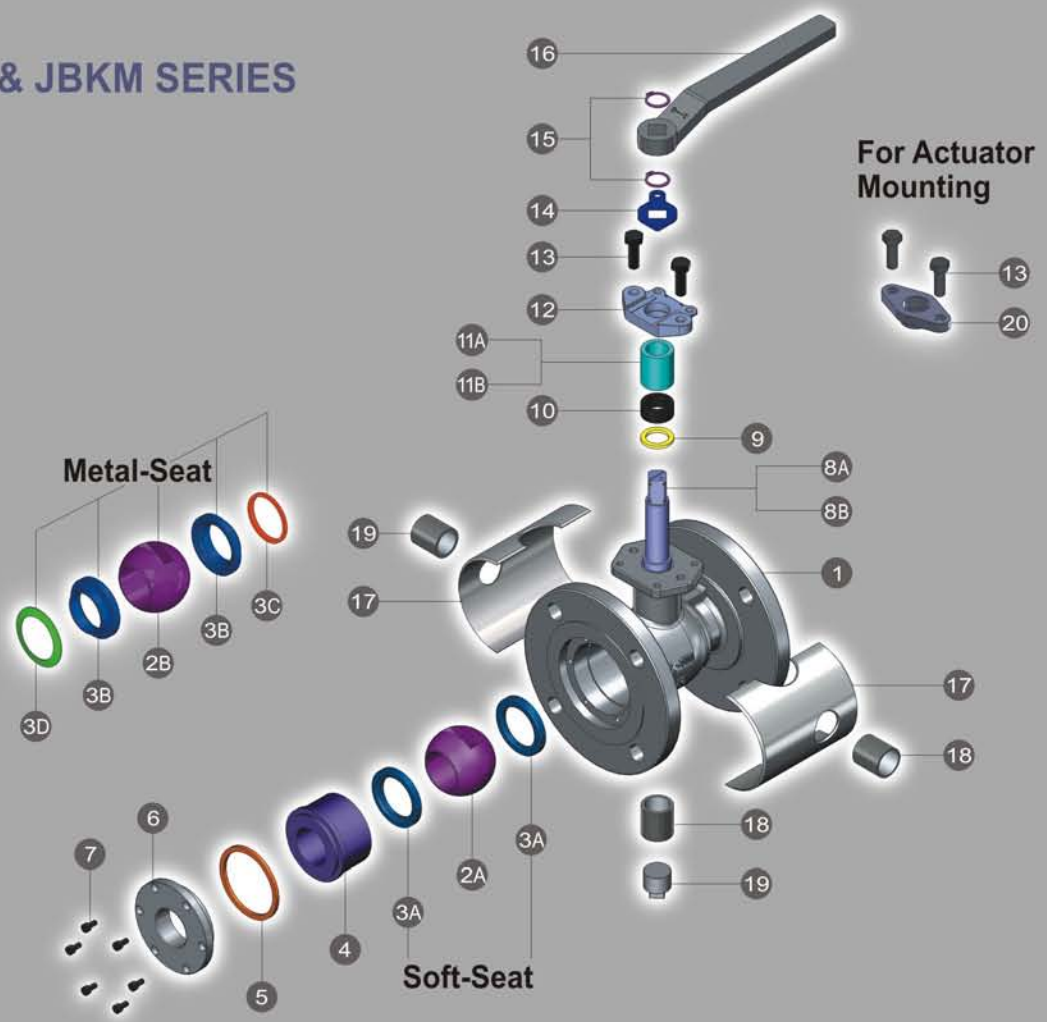

MATERIAL

NO		PARTS NAME	MATERIAL	
1		BODY	ASTM A351-CF8	ASTM A351-CF8M
2A	SOFT-SEAT	BALL	ASTM A351-CF8	ASTM A351-CF8M
3A		SEAT	PTFE/R-PTFE/TFM-1600/PEEK	
2B	METAL-SEAT	BALL	ASTM A351-CF8+HCr	ASTM A351-CF8M+HCr
3B		SEAT	ASTM A351-CF8+STELLITE	ASTM A351-CF8M+STELLITE
3C		SEAT PACKING	GRAPHITE	
3D		SEAT SPRING	INCONEL X750	
4		SEAT SUPPORT	ASTM A351-CF8	ASTM A351-CF8M
5		GASKET	PTFE/GRAPHITE	
6		CAP	ASTM A351-CF8	ASTM A351-CF8M
7		BOLT	STAINLESS STEEL	
8A	SOFT-SEAT	STEM	SUS 304	SUS 316
8B	METAL-SEAT		SUS304+HARDEN FACE	SUS316+HARDEN FACE
9		THRUST WASHER	SUS 316+HARDEN FACE	
10		STEM PACKING	PTFE/GRAPHITE	
11A	SOFT-SEAT	RING	SUS 304	SUS 316
11B	METAL-SEAT		SUS304+HARDEN FACE	SUS316+HARDEN FACE
12		MANUAL GLAND	ASTM A351-CF8	
13		GLAND BOLT	SUS 304	
14		TRAVEL STOP	SUS 304	
15		SNAP CATCH	SUS 304	
16		HANDLE	FCD45(15A~80A)/SGP/FCD(100A~200A)	
17		JACKET	SUS 304	
18		NIPPLE JOINT	SUS 304	
19		PLUG	SUS 304	
20		ACTUATOR GLAND	SUS 304	

Notes: HCr = Hard Chrome Plated

Above materials may vary with different using conditions.

DIMENSIONS (JBK/JBKM-C1 SERIES ANSI-150LB) (M.M.)

PORT SIZE		FLANGE SIZE		A	D	S	E	L	K	T	H	F	M	N	Q	W	P	C
15	1/2"	40	1-1/2"	15	63	10	130	108	127	14.3	98.5	73	16	4	42	M5	41	NPT 1/2"
20	3/4"	40	1-1/2"	20	68	10	130	117	127	14.3	98.5	73	16	4	42	M5	45.5	NPT 1/2"
25	1"	50	2"	25	76	12	160	127	152	15.9	120.5	92	19	4	50	M6	50.5	NPT 3/4"
40	1-1/2"	65	2-1/2"	38	88	17	224	165	178	17.5	139.5	105	19	4	70	M8	62.5	NPT 3/4"
50	2"	80	3"	50	94	17	224	178	190	19.1	152.5	127	19	4	70	M8	68	NPT 3/4"
65	2-1/2"	100	4"	65	115	20	324	190	229	23.9	190.5	157	19	8	70	M8	75	NPT 3/4"
80	3"	125	5"	76	120	20	324	203	254	23.9	216	186	22	8	70	M8	82	NPT 3/4"
100	4"	150	6"	100	195	27	400	229	279	25.4	241.5	216	22	8	102	M10	82.5	NPT 3/4"
150	6"	200	8"	150	240	32	550	394	343	28.6	298.5	270	22	8	125	M12	157	NPT 3/4"
200	8"	300	12"	200	300	35	1000	457	483	31.8	432	381	25	12	140	M16	173.5	NPT 3/4"

DIMENSIONS (JBK/JBKM-C2 SERIES ANSI-300LB) (M.M.)

PORT SIZE		FLANGE SIZE		A	D	S	E	L	K	T	H	F	M	N	Q	W	P	C
15	1/2"	40	1-1/2"	15	63	10	130	140	156	20.7	114.5	73	22	4	42	M5	57	NPT 1/2"
20	3/4"	40	1-1/2"	20	68	10	130	152	156	20.7	114.5	73	22	4	42	M5	63	NPT 1/2"
25	1"	50	2"	25	76	12	160	165	165	22.3	127	92	19	8	50	M6	69.5	NPT 3/4"
40	1-1/2"	65	2-1/2"	38	88	17	224	190	190	25.4	149	105	22	8	70	M8	75	NPT 3/4"
50	2"	80	3"	50	94	17	224	216	210	28.6	168	127	22	8	70	M8	87	NPT 3/4"
65	2-1/2"	100	4"	65	115	20	324	241	254	31.8	200	157	22	8	70	M8	100.5	NPT 3/4"
80	3"	125	5"	76	120	20	324	283	279	35	235	186	22	8	70	M8	122	NPT 3/4"
100	4"	150	6"	100	195	27	400	305	318	36.6	270	216	22	12	102	M10	120.5	NPT 3/4"
150	6"	200	8"	150	240	32	550	403	381	41.3	330	270	25	12	125	M12	161.5	NPT 3/4"
200	8"	300	12"	200	300	35	1000	502	521	50.8	451	381	32	16	140	M16	196	NPT 3/4"

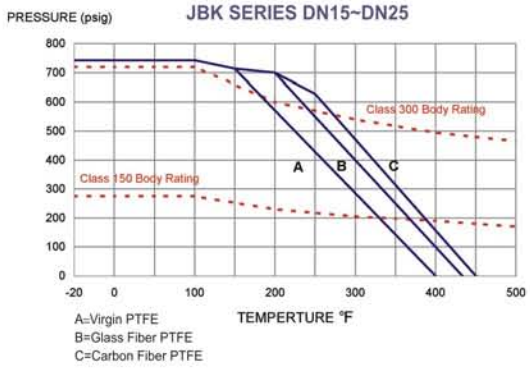

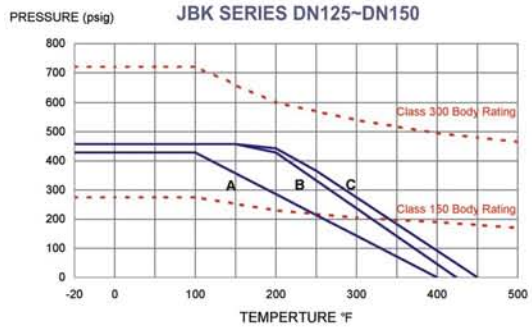

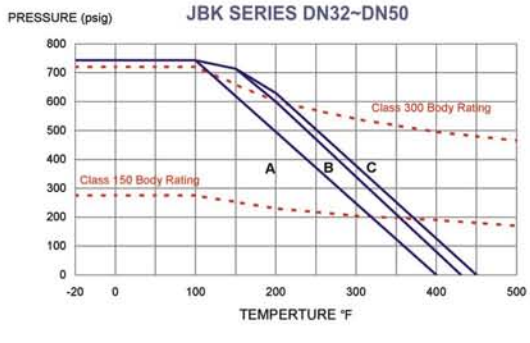

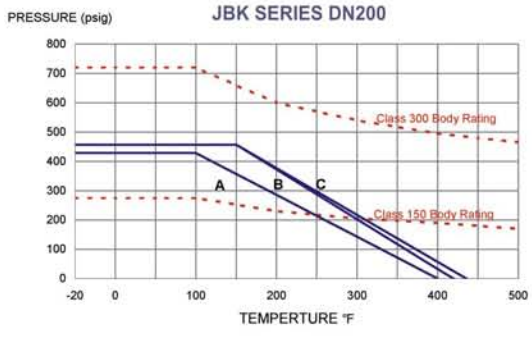

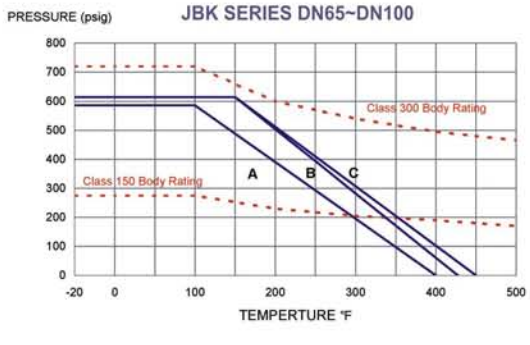

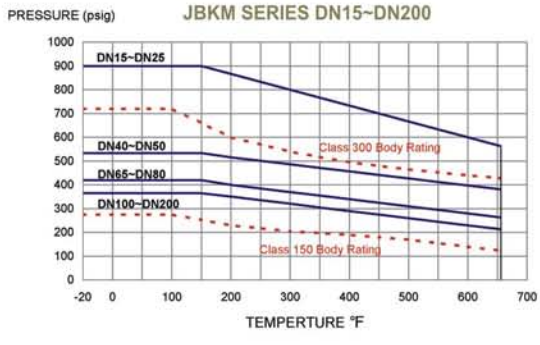

HOW TO ORDER

JBK → A → B C D → E → F

Ex: JBK → C1 → 03 A P → 050 → FH

A. SPECIFICATION

A1	JIS 10K
A2	JIS 20K
C1	ANSI 150LB
C2	ANSI 300LB

B. BODY MAT'L

03	CF8
04	CF8M
05	CF3
06	CF3M
07	CG8M
08	CG3M

C. BALL & STEM MAT'L

A	CF8
C	CF8M
D	CF3
E	CF3M
F	CG8M
H	CG3M

D. SEAT MAT'L

P	PTFE
G	15% GLASS FIBER +PTFE
C	15% CARBON +PTFE
S	50% SS316+50% PTFE
T	TFM-1600
E	PEEK

E. SIZE:PORTxFLANGE

015	1/2" x1-1/2"
020	3/4" x1-1/2"
025	1" x2"
040	1-1/2" x2-1/2"
050	2" x3"
065	2-1/2" x4"
080	3" x5"
100	4" x6"
150	6" x8"
200	8" x12"

F. OPTION

F	FIRE SAFE
L	LONG STEM
I	LIVE LOADING
H	LEVER
G	GEAR

JBKM → A → B C D → E → F → G

Ex: JBKM → C2 → 04 C C → 050 → FLG → HC

A. SPECIFICATION

A1	JIS 10K
A2	JIS 20K
C1	ANSI 150LB
C2	ANSI 300LB

B. BODY MAT'L

03	CF8
04	CF8M
05	CF3
06	CF3M
07	CG8M
08	CG3M

C. BALL & STEM MAT'L

A	CF8
C	CF8M
D	CF3
E	CF3M
F	CG8M
H	CG3M

D. SEAT MAT'L

A	CF8
C	CF8M
D	CF3
E	CF3M
F	CG8M
H	CG3M

E. SIZE:PORTxFLANGE

015	1/2" x1-1/2"
020	3/4" x1-1/2"
025	1" x2"
040	1-1/2" x2-1/2"
050	2" x3"
065	2-1/2" x4"
080	3" x5"
100	4" x6"
150	6" x8"
200	8" x12"

F. OPTION

F	FIRE SAFE
L	LONG STEM
I	LIVE LOADING
H	LEVER
G	GEAR

G. COATING

HC	HCR BALL+STELLITE SEAT
TC	TC BALL+TC SEAT

HOW TO ORDER

HEAD OFFICE
JDV CONTROL VALVES CO., LTD

NO. 2-2, LANE 292, SHIN NUNG ROAD, SHIN WU TOWN 327, TAOYUAN HSIEN, TAIWAN.
■ FACTORY
TEL: 886-3-4203366 FAX: 886-3-4202268 E-MAIL: webmaster@jdv.com.tw
■ SALES DEPARTMENT
TEL: 886-3-4205707 FAX: 886-3-4206818 E-MAIL: sales@jdv.com.tw

Copyright 2010/10. All rights are reserved by JDV. Technical data and content may be changed by JDV as necessary.

6D-0539 ISO 9001 0575