JDV
CONTROL
VALVES

JSB Series

V-Port Segment Control Valve



JDV
CONTROL
VALVES

JSB Series

V-Port Segment Control Valve



The JSB Series of rotary valve is the throttling control ball valve that provides high valve capacity with optimum flow characteristic for wide industrial services such as Pulp and Paper, Refinery, Chemical, and Petrochemical Industries.

Product Features

1. 1-PC body design prevents leakage
2. V-Ball provides large straight pass of fluid with solid particles.
3. V-Ball with top and bottom bearings offers low torque operation
4. Rotary-valve design provides cutting to the particles in fluid between the v- ball and the seat enables the fluid to pass smooth without obstruction.
5. Spring supported metal seats
6. Interchangeable soft seats and metal seats satisfy different applications. Seats can be changed easily and directly by simple steps.
7. Automatic pressure relief design
8. Nearly equal percentage flow characteristic.
9. Available in flangeless or flange connection.
10. Integral mounting pad
11. Anti-stastic device
12. Easily removed cap design simplifies the procedure of changing inner parts.



Applications

1. Slurry and viscous fluid
2. Powder and particles in fluid
3. Chips and fibers in pulp and paper process
4. Flow control
5. Pressure control

V-Port Segment Valve

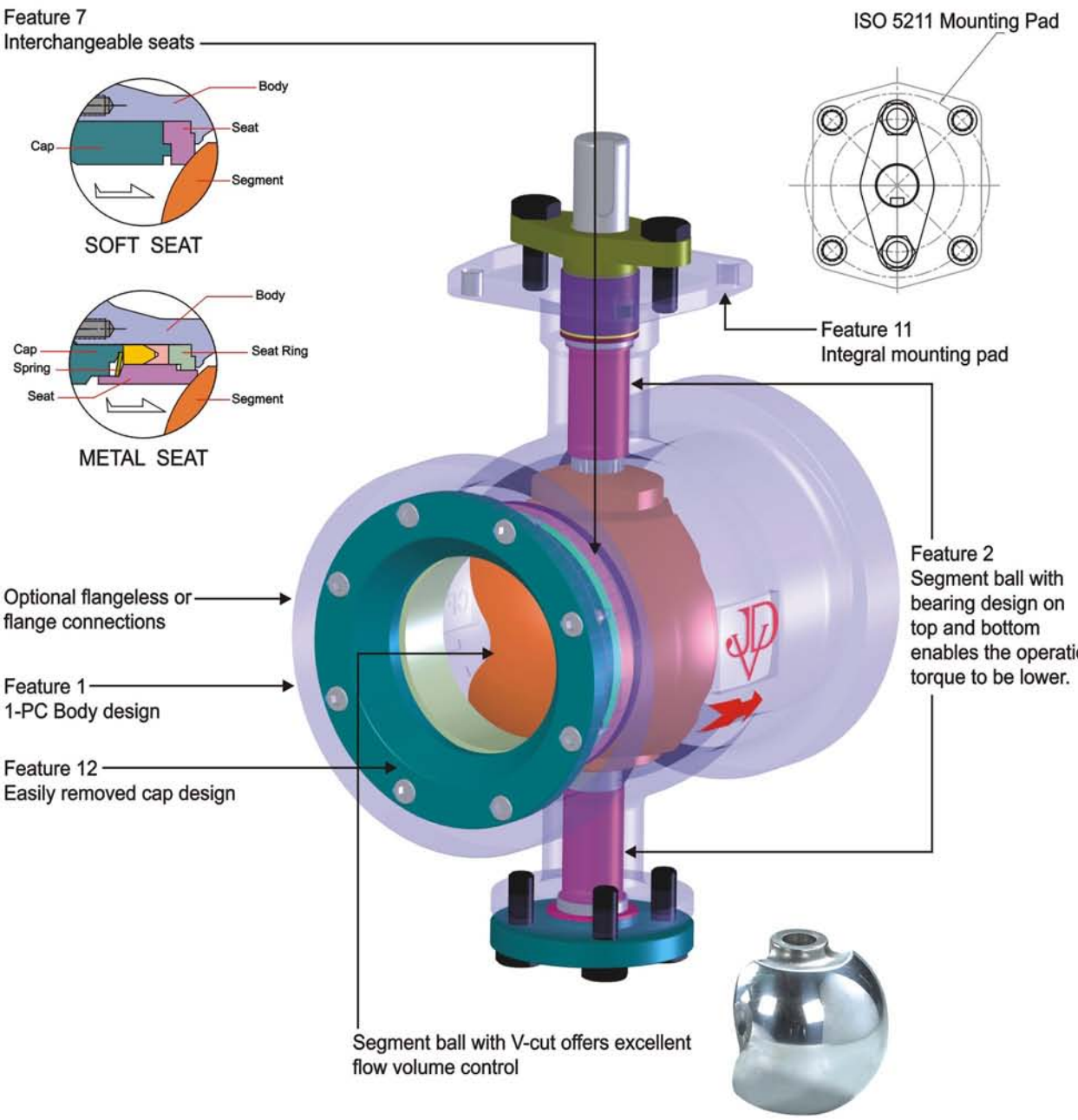

JDV CONTROL VALVES



Applicable Standards

- Body material: Standard in WCB、CF8、CF8M. Special material is available according to requirements.
- Nominal size: 1" to 12" (DN 25 to DN 300)
- Pressure rating: JIS 10/20K、ANSI 150/ 300LB.
- End connections: Raised face Flange and Flangeless.
- Rangeability: Greater than 150:1.
- Seat leakage: according to FCI 70-2(B16.104).
  - (a) Type : Soft seat : ANSI class VI.
  - (b) Type : Metal seat : ANSI class IV.
- Temperature Range: - 20 Deg C to 250 Deg C
- Face to face dimension: According to ISA S75.04.
- Fire safety design: Conform to API 607.

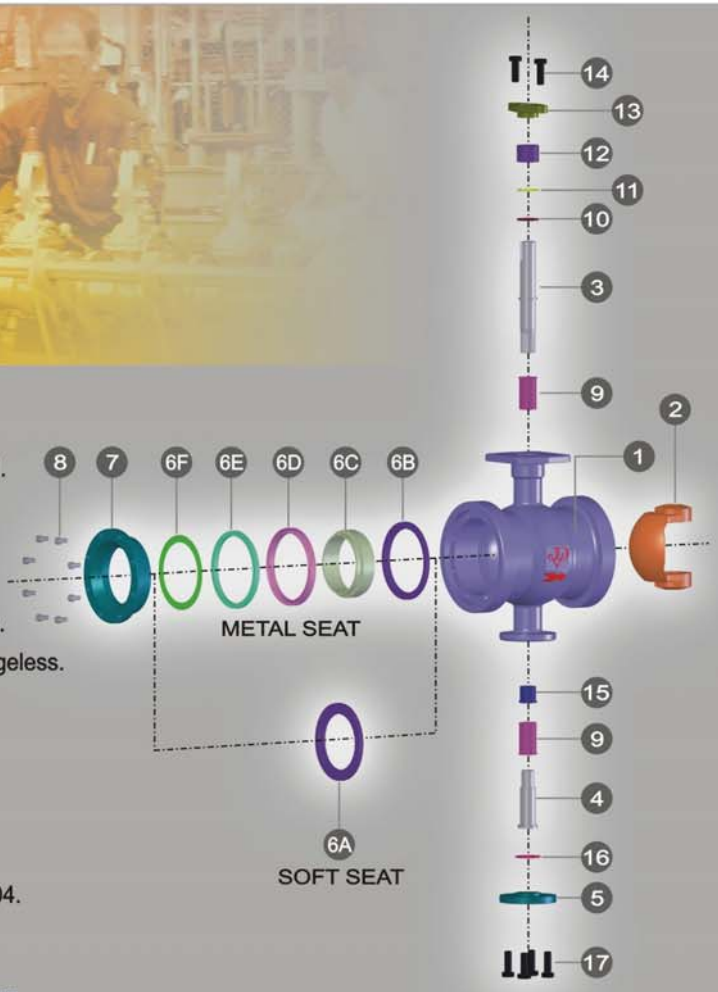

Technical Specification

MATERIAL

NO		NAME	MATERIAL		
1		BODY	WCB	CF8	CF8M
2-1		SEGMENT - SOFT SEAT	CF8		CF8M
2-2		SEGMENT - METAL SEAT	CF8+HCr		CF8M+HCr
3		STEM	SUS 304		SUS 316
4		SHAFT	SUS 304		SUS 316
5		END COVER	WCB	CF8	CF8M
SOFT SEAT	6A	SEAT	15%R-PTFE		
METAL SEAT	6B	SEAT SUPPORT	SUS 304		SUS 316
	6C	SEAT	SUS 304+STELLITE		SUS316+STELLITE
	6D	PACKING	PTFE/GRAPHITE		
	6E	SEAT GLAND	SUS 304		SUS 316
	6F	SPRING	INCONEL X750		
7		CAP	CF8		CF8M
8		BOLT	SUS 304		SUS 316
9		THRUST BEARING	SUS316+TFE		
10		WASHER	PTFE		
11		WASHER	SUS 316		
12		GLAND PACKING	PTFE/GRAPHITE		
13		GLAND	SCS13		
14		GLAND BOLT	SUS304		
15		SUPPORT	SUS316		
16		COVER GASKET	PTFE/GRAPHITE		
17		COVER BOLT	SUS304		

Notes:
HCr = Hard Chrome Plated

Above materials may vary with different using conditions.

TEMPERATURE & PRESSURE CURVE

DN15~DN100

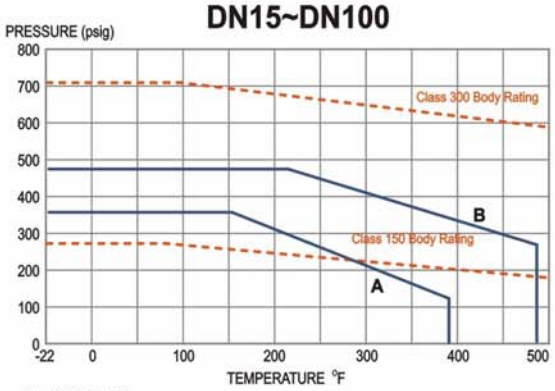

A = PTFE SEAT
B = METAL SEAT

DN150~DN200

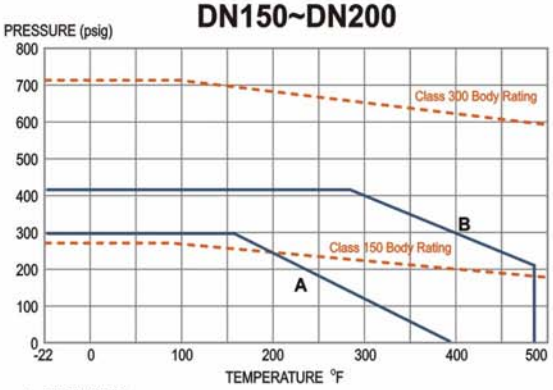

A = PTFE SEAT
B = METAL SEAT

DN250~DN300

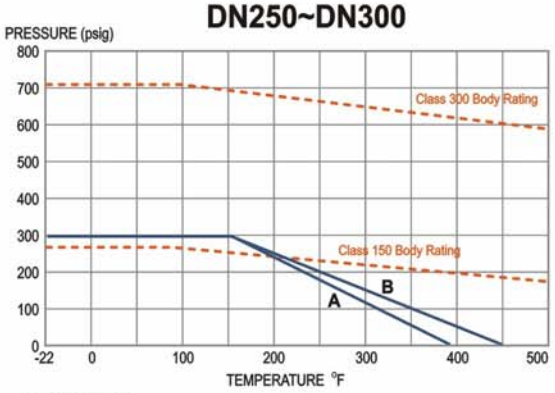

A = PTFE SEAT
B = METAL SEAT

INHERENT FLOW CHARACTERISTICS

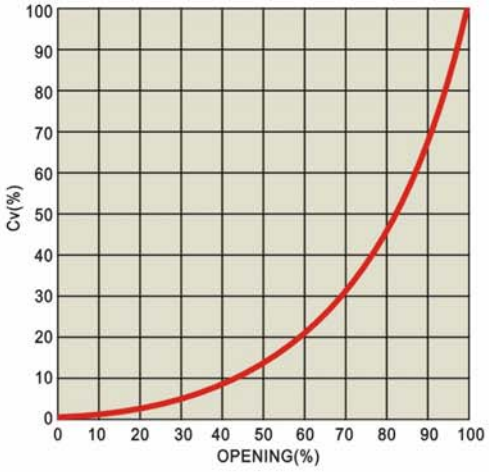

Cv VALUES										
SIZE	OPENING %									
	10	20	30	40	50	60	70	80	90	100
1"	0.01	0.52	1.66	3.44	5.87	9.11	13.36	18.83	27.54	40.50
1-1/2"	0.02	1.06	3.35	6.95	11.85	18.38	26.96	38.00	55.55	81.70
2"	0.04	1.68	5.30	11.00	18.75	29.10	42.67	60.12	87.90	129.30
2-1/2"	0.06	2.79	8.80	10.23	31.10	40.26	70.78	99.74	145.86	214.50
3"	0.10	4.54	14.30	29.67	50.62	78.50	115.20	162.30	237.40	349.10
4"	0.15	6.57	20.70	43.00	73.30	113.70	166.80	235.00	343.70	505.50
6"	0.38	16.70	52.70	109.30	186.50	289.50	424.54	598.20	874.80	1286.50
8"	0.50	21.90	69.00	143.00	244.10	378.90	555.68	783.00	1145.00	1683.90
10"	0.93	39.58	124.85	258.80	441.50	685.13	1004.80	1416.00	2040.00	3045.00
12"	1.29	55.96	176.50	366.00	624.20	968.60	1420.60	2001.80	2927.40	4305.00

※ Above values are just for reference, and the exact values will be presented by the practical testing.

FLANGELESS TYPE

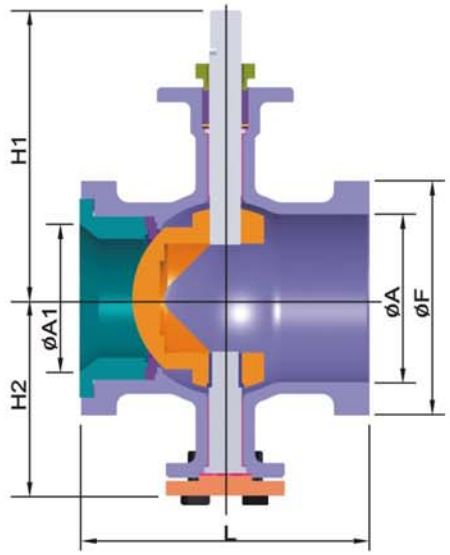

FLANGED TYPE

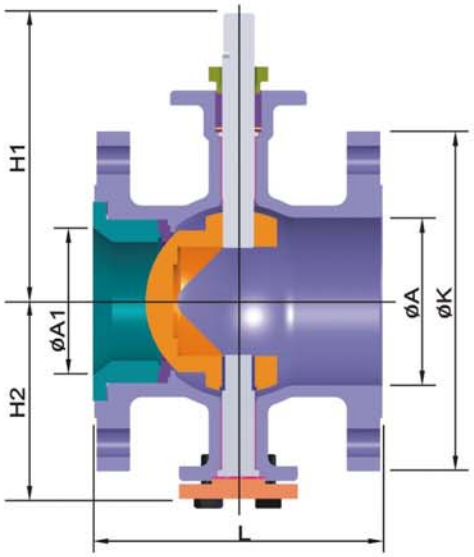

DIMENSION FOR FLANGELESS TYPE (JSB-CLASS 150/300LB(10K/20K)) (M.M.)

SIZE		A	A1	F	L	H1	H2	B	B1	E	G	S	ISO 5211
25	1"	38	25	64	102	120	70	33	20	5	17.5	15.5	F05
40	1-1/2"	50	40	82	114	120	75	45	30	5	17.5	15.5	F07
50	2"	60	50	100	124	142	90	45	30	5	17.5	15.5	F07
65	2-1/2"	73	65	118	143	150	102	45	30	5	17.5	15.5	F07
80	3"	89	80	131	165	164	111	45	30	8	25	22	F07
100	4"	113	100	156	194	190	135	52	30	8	25	22	F10
150	6"	160	132	216	229	240	165	52	30	8	28	25	F10
200	8"	203	200	267	243	290	210	70	45	8	33	30	F12
250	10"	260	250	326	297	370	250	80	50	10	40	35	F12
300	12"	300	280	375	338	450	260	87	55	10	45	40	F14

Face to face dimension L according to ISA S75.04.

DIMENSION FOR FLANGED TYPE (JSB-CLASS 150/300LB (10K/20K)) (M.M.)

SIZE		A	A1	150LB K	300LB K	10K K	20K K	L	H1	H2	B	B1	E	G	S	ISO 5211
25	1"	38	25	108	124	125	125	102	120	70	33	20	5	17.5	15.5	F05
40	1-1/2"	50	40	127	156	140	140	114	120	75	45	30	5	17.5	15.5	F07
50	2"	60	50	152	165	155	155	124	142	90	45	30	5	17.5	15.5	F07
65	2-1/2"	73	65	178	190	175	175	143	150	102	45	30	5	17.5	15.5	F07
80	3"	89	80	190	210	185	200	165	164	111	45	30	8	25	22	F07
100	4"	113	100	229	254	210	225	194	190	135	52	30	8	25	22	F10
150	6"	160	132	279	318	280	305	229	240	165	52	30	8	28	25	F10
200	8"	203	200	343	381	330	350	243	290	210	70	45	8	33	30	F12
250	10"	260	250	406	444	400	430	297	370	250	80	50	10	40	35	F12
300	12"	300	280	483	521	445	480	338	450	260	87	55	10	45	40	F14

Face to face dimension L according to ISA S75.04.

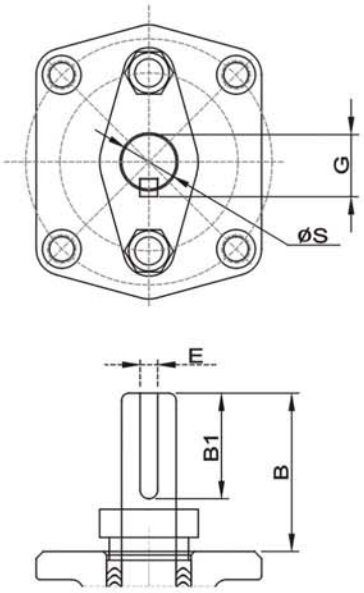



ISO 9001

HOW TO ORDER

JSB → A → B → C D → E → F

Ex: **JSB → W1 → 04 → C M → 050 → FH**

A. SPECIFICATION	
W1	FLANGELESS
A1	JIS 10K
A2	JIS 20K
C1	ANSI 150LB
C2	ANSI 300LB
D1	DIN PN10
D2	DIN PN16
D3	DIN PN25
D4	DIN PN40

B. BODY MAT'L	
02	WCB
03	CF8
04	CF8M
05	CF3
06	CF3M
07	CG8M
08	CG3M

C. TRIM MAT'L	
A	CF8
C	CF8M
D	CF3
E	CF3M
F	CG8M
H	CG3M

D. SEAT TYPE	
P	PTFE SEAT
M	METAL SEAT

E. SIZE	
025	1"
040	1-1/2"
050	2"
065	2-1/2"
080	3"
100	4"
150	6"
200	8"
250	10"
300	12"

F. OPTION	
F	FIRE SAFE
L	LONG STEM
I	LIFE LOADING
H	LEVER
G	GEAR

HOW TO ORDER

HEAD OFFICE
JDV CONTROL VALVES CO., LTD

NO. 2-2, LANE 292, SHIN NUNG ROAD, SHIN WU TOWN 327, TAOYUAN HSIEN, TAIWAN.
■ FACTORY
TEL: 886-3-4203366 FAX: 886-3-4202268 E-MAIL: webmaster@jdv.com.tw
■ SALES DEPARTMENT
TEL: 886-3-4205707 FAX: 886-3-4206818 E-MAIL: sales@jdv.com.tw

Copyright 2008/08. All rights are reserved by JDV. Technical data and content may be changed by JDV as necessary

6D-0539 ISO 9001 0575